REFERENCE DRAWINGS	
REPAIR PART	DRAWING NUMBER
B25/T25	9974–005–001
B15/T15	9974–015–001

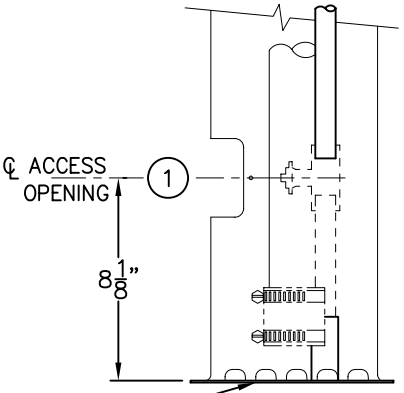

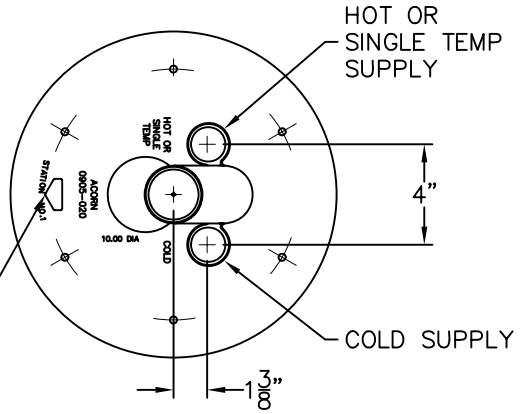

2 **BOTTOM SUPPLY ROUGH-IN**

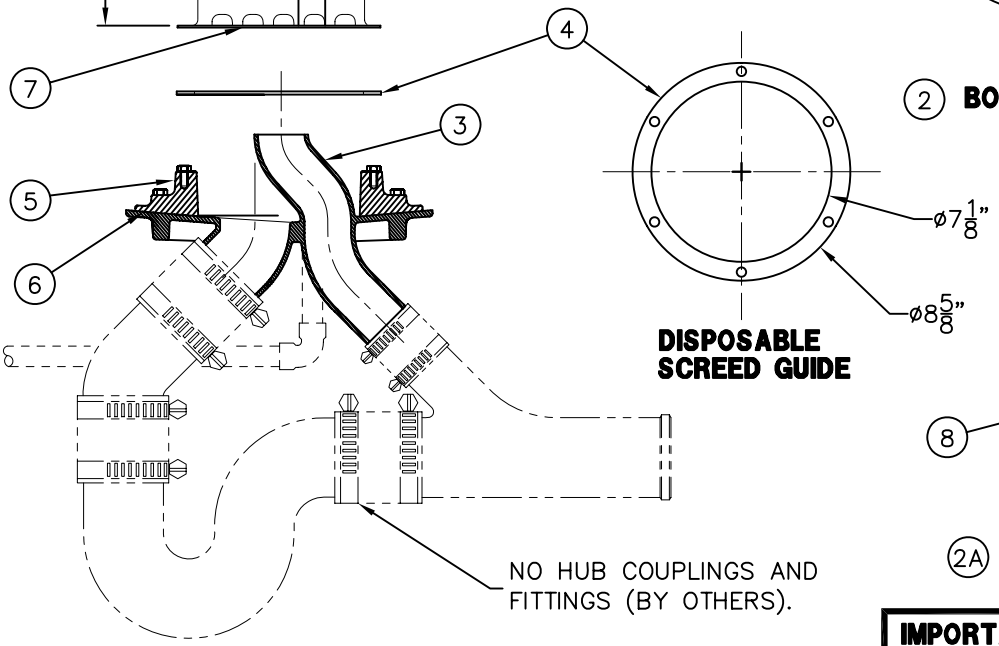

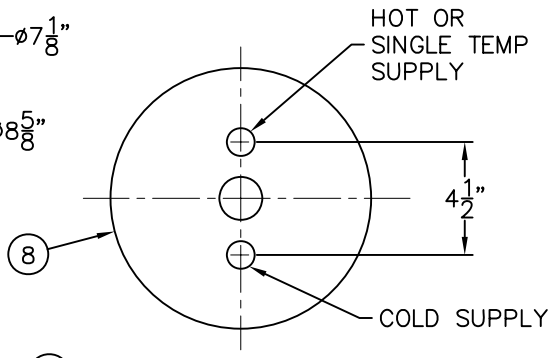

2A **TOP SUPPLY ROUGH-IN**

IMPORTANT: FLUSH SYSTEM PRIOR TO CONNECTING SUPPLY PIPING.

INSTALLATION INSTRUCTIONS:

A–ROUGH–IN SUPPLY & WASTE: REFERENCE THE #1 STATION TO ROUGH–IN SUPPLY AND WASTE REQUIREMENTS. TO PROVIDE A REFERENCE FOR THE DISCHARGE PATTERN SHOWN ON ARCHITECTURAL PLANS OR TO SUIT JOB REQUIREMENTS, THE #1 STATION LOCATION IS INDICATED ON THE DRAIN BASE BY AN ARROW AND ON THE COLUMN BY THE LOCATION OF THE ACCESS OPENING 1.

B–INSTALL THE DRAIN BASE: PROVIDE 3/4" NCT PIPING AND CAP–OFF. ROUGH–IN FOR DIMENSIONS SHOWN 2 WITH ADDITIONAL ALLOWANCE FOR FITTING TO EXACT DIMENSION LATER. ROUGH–IN WASTE AND VENT PIPING. SUPPORT AND LEVEL DRAIN 3 SUCH THAT THE FINISHED FLOOR IS FLUSH WITH TOP OF DISPOSABLE SCREED GUIDE 4. FINISHED FLOOR SHOULD BE SUFFICIENT SLOPE TO PROVIDE PROPER DRAINAGE. WHEN WATERPROOF MEMBRANE (BY OTHERS) IS SPECIFIED, REMOVE CLAMPING COLLAR 5 PRIOR TO MEMBRANE 6 INSTALLATION. RE–INSTALL CLAMPING COLLAR.

C–PREPARATION FOR SETTING SHOWER COLUMN: ACORN PROVIDE UNIT SUPPLY CONNECTION AT THE APPROXIMATELY HORIZONTAL CENTERLINE OF THE ACCESS OPENING 1 FOR BOTTOM SUPPLY AND TO A POINT 3" BELOW THE TOP OF THE SPRAYHEAD FOR TOP SUPPLY. CUT OFF THE PREVIOUSLY INSTALLED SUPPLIES TO CORRECT HEIGHT.

D–INSTALLING SHOWER COLUMN: UNFASTEN SCREED GUIDE FROM DRAIN BODY AND DISCARD. REMOVE ACCESS PANEL FROM COLUMN ASSEMBLY AND PLACE COLUMN ONTO DRAIN BASE. ALIGN ACCESS OPENING 1 WITH #1 STATION LOCATION ON DRAIN. BOLT COLUMN FLANGE 7 TO DRAIN. CONNECT UNIT SUPPLIES WITH INSTALLER PROVIDED COUPLING OR OPTIONAL UNIT STOPS (–GG). STOPS ARE RECOMMENDED FOR ALL INSTALLATIONS. SEE DWG No.# 9940–240–001 FOR INSTALLATION DETAILS. FOR BOTTOM SUPPLY SOLDER JOINTS THROUGH ACCESS OPENING 1 AND REPLACE ACCESS PANEL. FOR TOP SUPPLY SOLDER JOINT THROUGH TOP OF SPRAYHEAD AND REPLACE SPRAYHEAD COVER 8.

ACORN ENGINEERING COMPANY
P.O. BOX 3527 INDUSTRY, CA. 91744
(626) 336–4561 FAX (626) 961–2200

TITLE		
T25 TOP AND B25 BOTTOM SUPPLY-VENT THRU COLUMN-INTEGRAL DRAIN BASE		
MANUFACTURE DATE	DATE ISSUED	DRAWING NUMBER
APRIL 1992 TO PRESENT	**04/01/92**	**9900-215-002**
	DATE REVISED **07/21/11**	

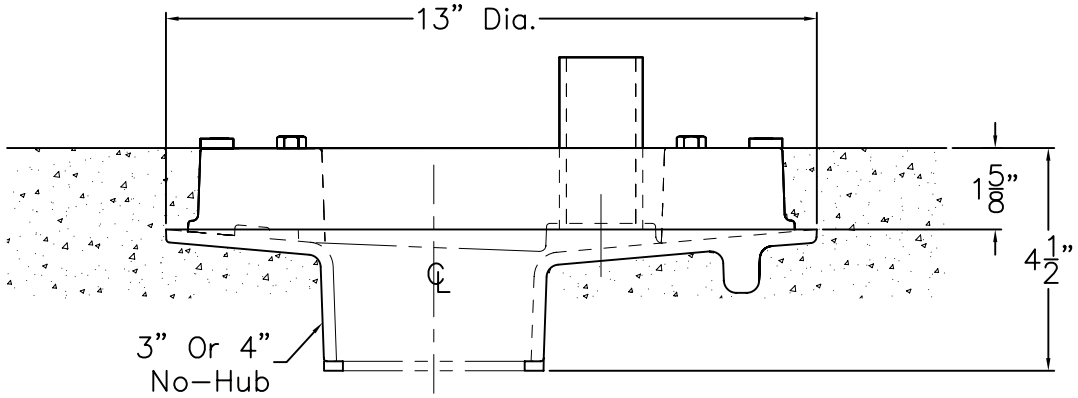

T11/B11 - T21/B21
Vent Off Drain Style

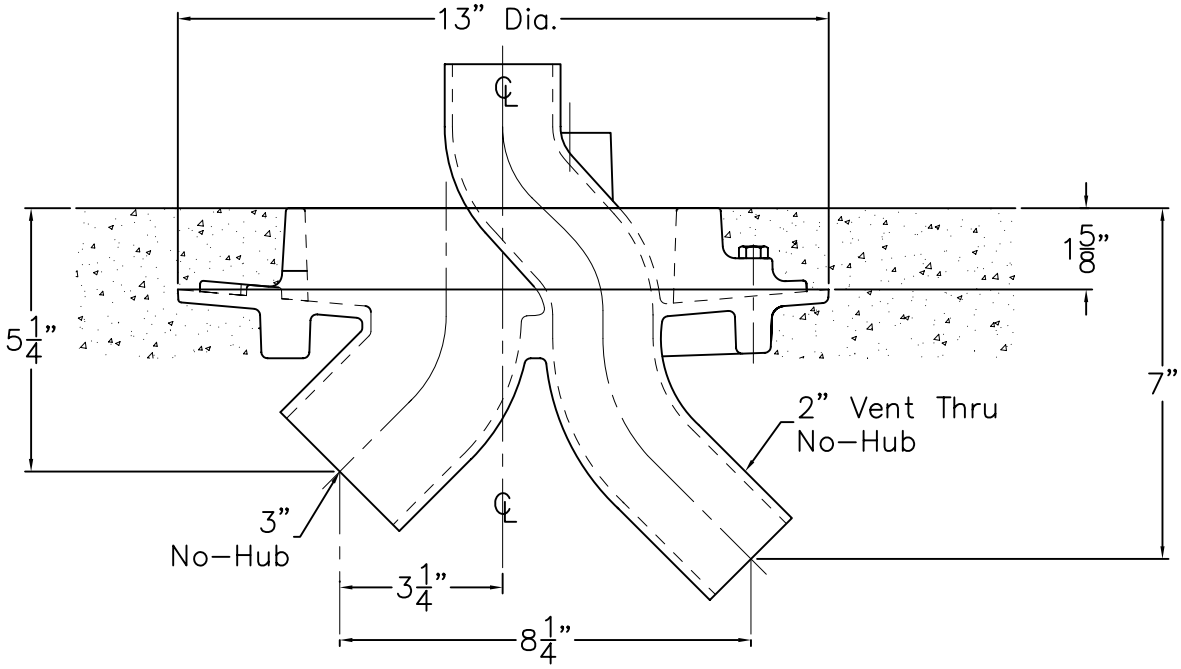

T15/B15 - T25/B25
Vent Thru Drain Style

THIS SHEET IS FOR USE WHEN FLOOR IS TO BE POURED PRIOR TO RECEIPT OF FLOOR DRAIN. INSTALLER IS RESPONSIBLE FOR WASTE / VENT PIPING.

DIMENSIONS SHOWN ABOVE ARE FOR REFERENCE ONLY. FOR BLOCK OUT, INSTALLER MUST LEAVE ROOM FOR ACCESS TO ASSEMBLE SHIELDED BAND COUPLINGS (BY OTHERS) BENEATH THE FLOOR.

NOTE: FOR VENT OFF DRAIN TYPES A J.R. SMITH CO. "SPEEDI-SET" OR "TY-SEAL" WASTE ADAPTER MAY BE USED (CHECK LOCAL CODES) WHICH ELIMINATES ACCESS BENEATH THE DRAIN.

ACORN ENGINEERING COMPANY
P.O. BOX 3527 INDUSTRY, CA. 91744
(626) 336-4561 FAX (626) 961-2200

TITLE		
COLUMN SHOWER DRAIN BASE BLOCKOUT INSTRUCTIONS		
MANUFACTURE DATE	DATE ISSUED	DRAWING NUMBER
JAN. 1992 TO PRESENT	**08/25/93**	**9900-235-001**
	DATE REVISED **11/16/07**	

REFERENCE DRAWINGS	
COLUMN DRAIN	DRAWING NUMBER
B11/T11 3" IC CONNECTION w/ GRATE	9974–010–001
B11/T11 –FO 4" NO–HUB w/ GRATE	9974–011–001
B21/T21 3" IC CONNECTION	9974–000–001
B21/T21 –FO 4" NO–HUB	9974–001–001

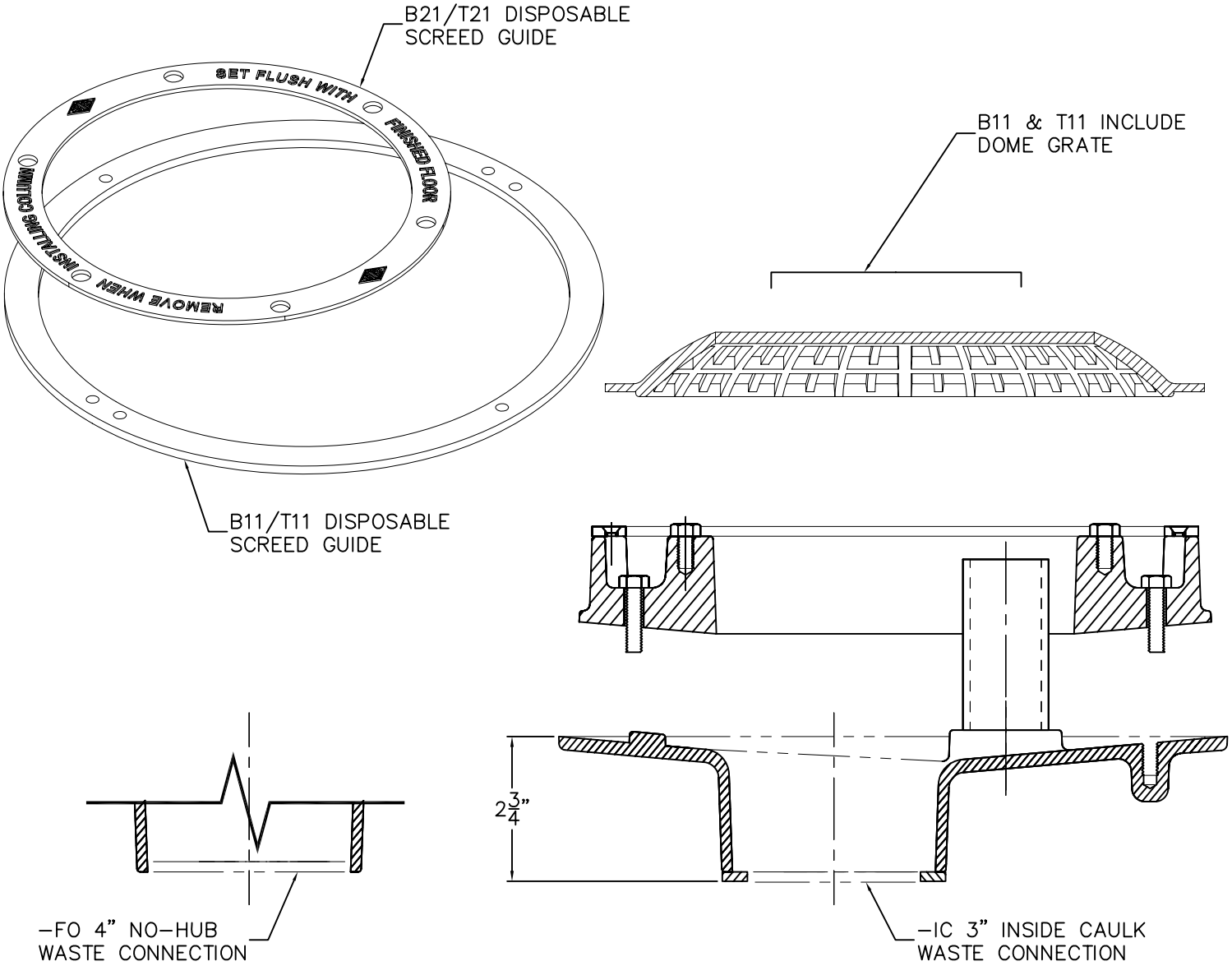

ACORN COLUMN SHOWER DRAIN BASE WITH SUFFIX OPTION -IC 3" INSIDE CAULK WASTE CONNECTION OR -FO 4" NO-HUB CONNECTION STYLES ONLY.

THIS OPTION ALLOWS FOR INSTALLATION OF DRAINS USING A 3" INSIDE CAULK WASTE CONNECTION FOR B11, T11, B21 & T21 MODELS. AN OPTIONAL –FO 4" NO–HUB CONNECTION IS ALTERNATIVELY AVAILABLE.

ACORN ENGINEERING COMPANY
P.O. BOX 3527 INDUSTRY, CA. 91744
(626) 336–4561 FAX (626) 961–2200

TITLE		
VENT OFF DRAIN FOR 3" INSIDE CAULK / 4" NO-HUB CONNECTION		
MANUFACTURE DATE	DATE ISSUED	DRAWING NUMBER
MARCH 1993 TO PRESENT	**01/27/94**	**9900-226-002**
	DATE REVISED **12/10/08**	

6 STATION CLASSIC SHOWER

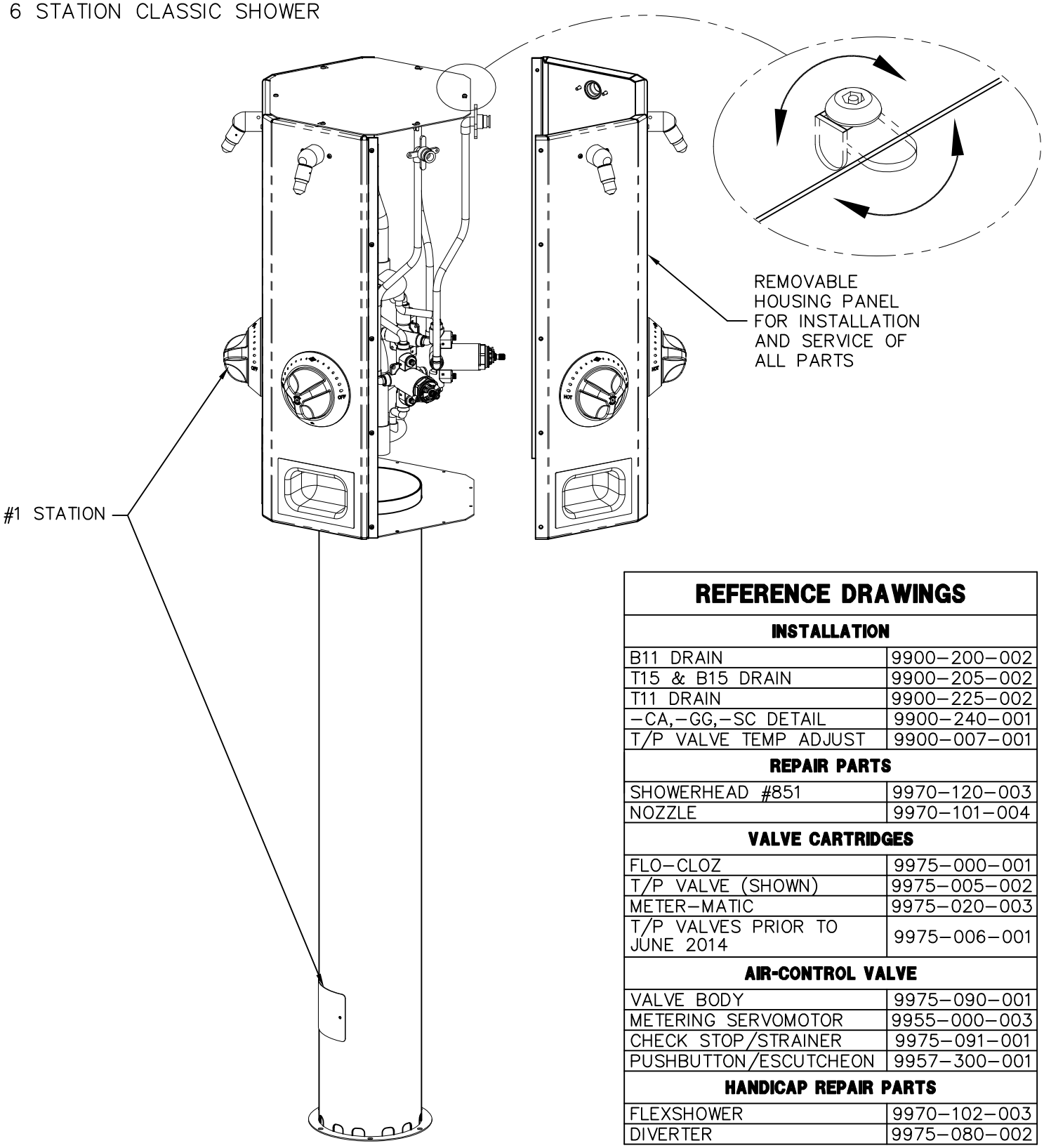

REFERENCE DRAWINGS	
INSTALLATION	
B11 DRAIN	9900–200–002
T15 & B15 DRAIN	9900–205–002
T11 DRAIN	9900–225–002
–CA,–GG,–SC DETAIL	9900–240–001
T/P VALVE TEMP ADJUST	9900–007–001
REPAIR PARTS	
SHOWERHEAD #851	9970–120–003
NOZZLE	9970–101–004
VALVE CARTRIDGES	
FLO–CLOZ	9975–000–001
T/P VALVE (SHOWN)	9975–005–002
METER–MATIC	9975–020–003
T/P VALVES PRIOR TO JUNE 2014	9975–006–001
AIR-CONTROL VALVE	
VALVE BODY	9975–090–001
METERING SERVOMOTOR	9955–000–003
CHECK STOP/STRAINER	9975–091–001
PUSHBUTTON/ESCUTCHEON	9957–300–001
HANDICAP REPAIR PARTS	
FLEXSHOWER	9970–102–003
DIVERTER	9975–080–002

ACORN ENGINEERING COMPANY
P.O. BOX 3527 Industry, CA 91744
15125 Proctor Ave Industry, CA 91746
(626) 336–4561 FAX (626) 961–2200

TITLE		
CLASSIC COLUMN SHOWERS 600 SERIES		
MANUFACTURE DATE	DATE ISSUED	DRAWING NUMBER
APRIL 1980 TO PRESENT	**07/25/02**	**9900-229-001**
	DATE REVISED **02/01/14 E**	

13/128

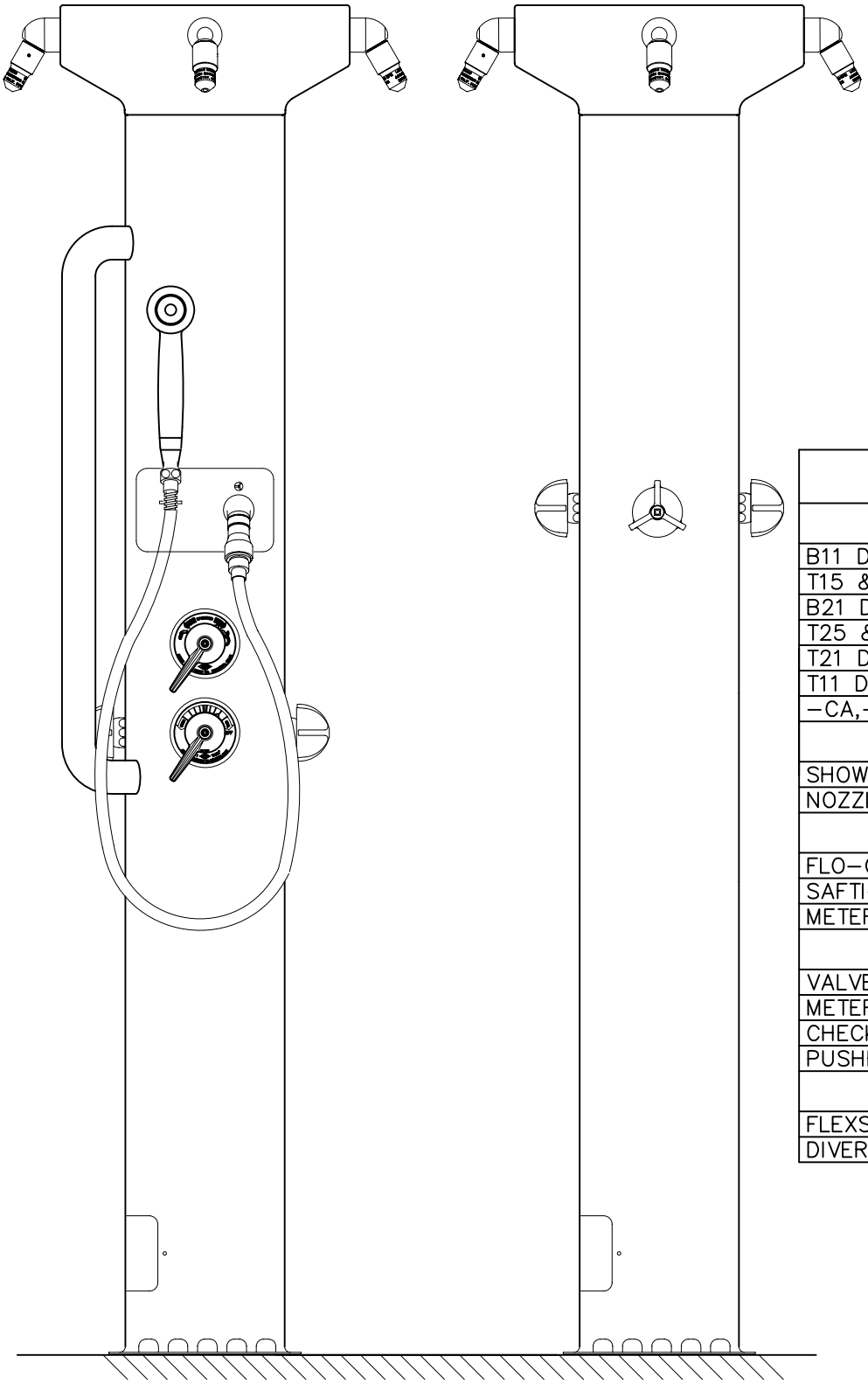

–HC CAPITAL SHWR. CAPITAL SHWR.

REFERENCE DRAWINGS	
DRAIN BASE INSTALLATION	
B11 DRAIN	9900–200–002
T15 & B15 DRAIN	9900–205–002
B21 DRAIN	9900–210–002
T25 & B25 DRAIN	9900–215–002
T21 DRAIN	9900–220–002
T11 DRAIN	9900–225–002
–CA,–GG,–SC DETAIL	9900–240–001
REPAIR PARTS	
SHOWERHEAD #852	9970–120–003
NOZZLE	9970–101–004
VALVE CARTRIDGES	
FLO–CLOZ	9975–000–001
SAFTI–TROL	9975–033–001
METER–MATIC	9975–020–003
AIR-CONTROL VALVE	
VALVE BODY	9975–090–001
METERING SERVOMOTOR	9955–000–003
CHECK STOP/STRAINER	9975–091–001
PUSHBUTTON/ESCUTCHEON	9957–300–001
HANDICAP REPAIR PARTS	
FLEXSHOWER	9970–102–003
DIVERTER	9975–080–001

ACORN ENGINEERING COMPANY
P.O. BOX 3527 INDUSTRY, CA. 91744
(626) 336–4561 FAX (626) 961–2200

TITLE **CAPITAL COLUMN SHOWERS 700 SERIES (INCLUDES -HC)**

MANUFACTURE DATE	DATE ISSUED	DRAWING NUMBER
APRIL 1980 TO PRESENT	**12/01/89**	**9900-230-001**
	DATE REVISED **07/19/11**	

13/128

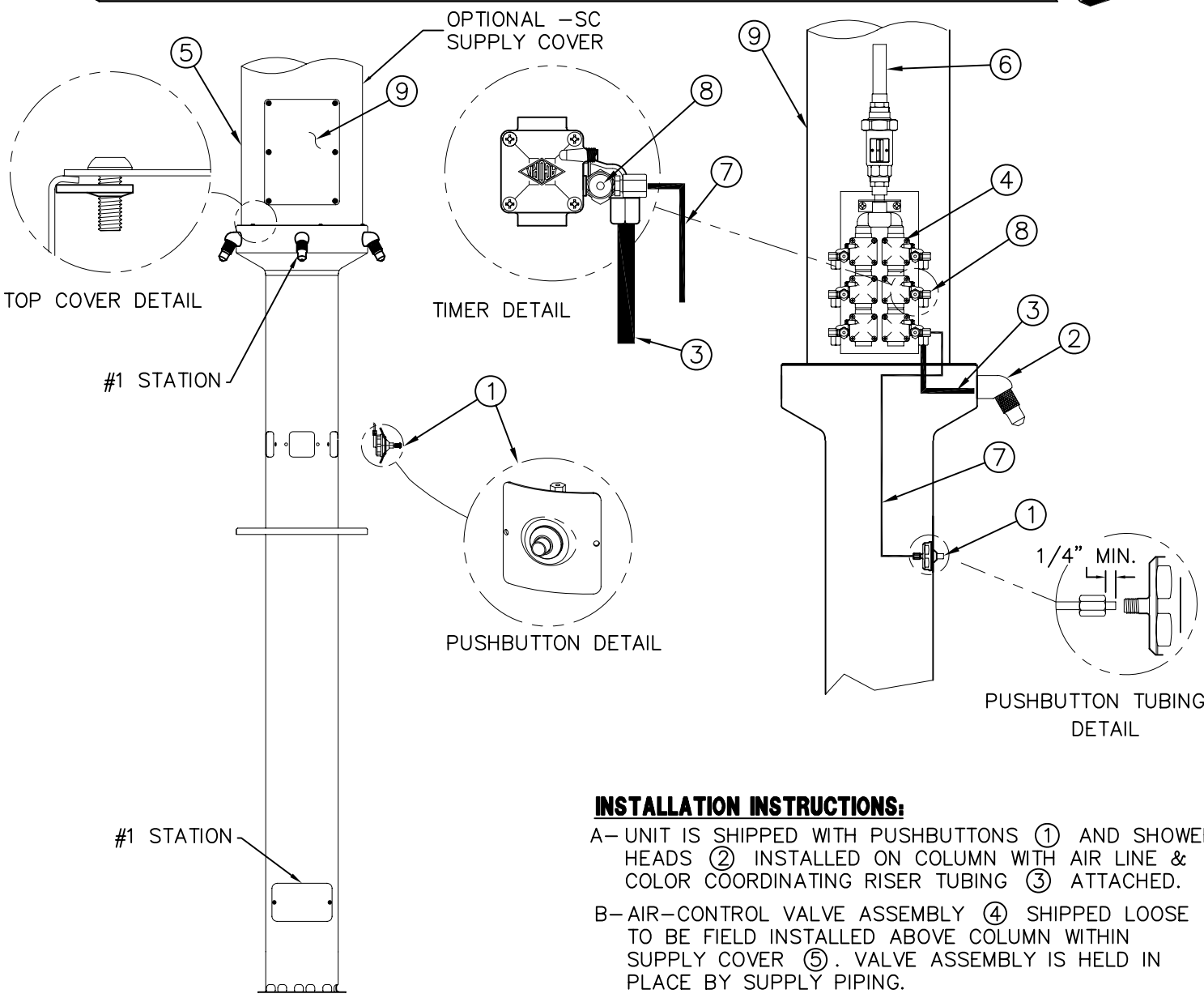

REFERENCE DRAWING	
AIR–CONTROL CONNE	9900–006–003

INSTALLATION INSTRUCTIONS:

A– UNIT IS SHIPPED WITH PUSHBUTTONS ① AND SHOWER HEADS ② INSTALLED ON COLUMN WITH AIR LINE & COLOR COORDINATING RISER TUBING ③ ATTACHED.

B– AIR–CONTROL VALVE ASSEMBLY ④ SHIPPED LOOSE TO BE FIELD INSTALLED ABOVE COLUMN WITHIN SUPPLY COVER ⑤. VALVE ASSEMBLY IS HELD IN PLACE BY SUPPLY PIPING.

C– POSITION THE AIR–CONTROL VALVE ASSEMBLY ③ WITHIN SUPPLY COVER ⑤ OR IN CEILING WITHIN 10 FEET OF PUSHBUTTON ①.

D– AFTER THOROUGHLY FLUSHING SUPPLY LINE, MAKE UP SUPPLY CONNECTION ⑥ (3/4" NCT).

E– CONNECT 1/8" OD POLYETHYLENE AIR LINES ⑦ FROM PUSHBUTTONS ① TO VALVE TIMERS ⑧.

F– CONNECT 1/4" OD POLYETHYLENE WATER LINES ③ TO SHOWERHEAD ② AND VALVE ASSEMBLY ③, HAND–TIGHTEN USING FERRULE NUTS PROVIDED. REPEAT THIS PROCEDURE AT EACH STATION.

G– WITH ACCESS PANEL ⑨ REMOVED, ADJUST VALVE TIMING AT TIMER ASSEMBLY ⑧. TIMING IS ADJUSTABLE FROM 5 TO 60 SECONDS.

NOTE:

MAXIMUM RECOMMENDED WORKING WATER PRESSURE IS 100 PSI; TEMPERATURE IS 130° F; OUTLET TEMPERATURE IS RECOMMENDED AT A MAXIMUM OF 105° F.

WARNING:

PRIOR TO MAKING INSTALLATION, SUPPLY LINES MUST BE FLUSHED OF ALL FOREIGN MATERIAL SUCH AS PIPE DOPE, CHIPS, SOLDER, ETC. VALVE MUST BE DRAINED PRIOR TO BEING SUBJECTED TO FREEZING TEMPERATURES.

ACORN ENGINEERING COMPANY
P.O. BOX 3527 INDUSTRY, CA. 91744
(626) 336–4561 FAX (626) 961–2200

TITLE		
CAPITAL SHOWER w/ -T TOP SUPPLY w/ AIR-CONTROL & -SC SUPPLY COVER		
MANUFACTURE DATE	DATE ISSUED	DRAWING NUMBER
JANUARY 1994 TO PRESENT	**10/28/98**	**9900-231-001**
	DATE REVISED **07/22/11**	

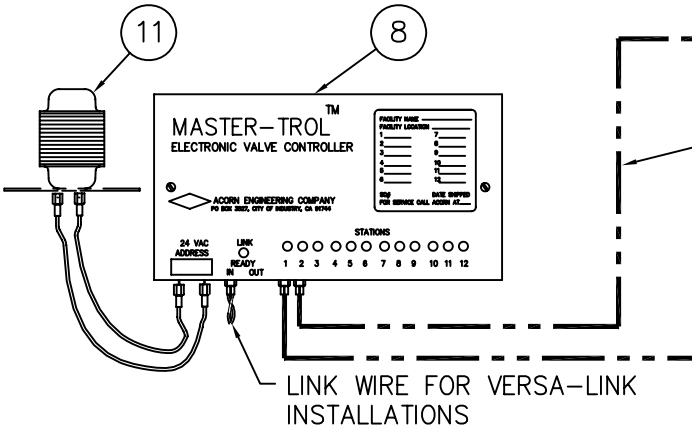

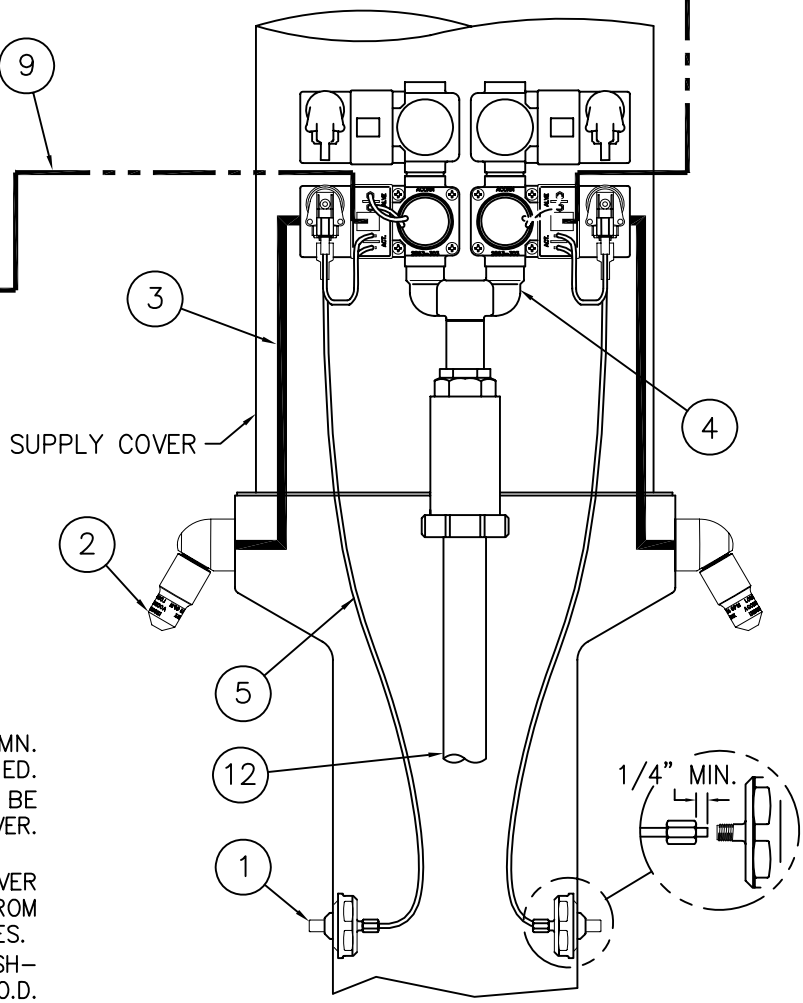

REFERENCE DRAWINGS	
MASTER-TROL HDWR.	9905-304-001
VALVE BODY	9955-006-003
COLUMN SHOWER	9900-230-001
FIXTURE TRIM	9957-300-001
VALVE CONTROLLER	9957-110-001
SOLENOID VALVE/ BRANCH BOX	9955-030-003

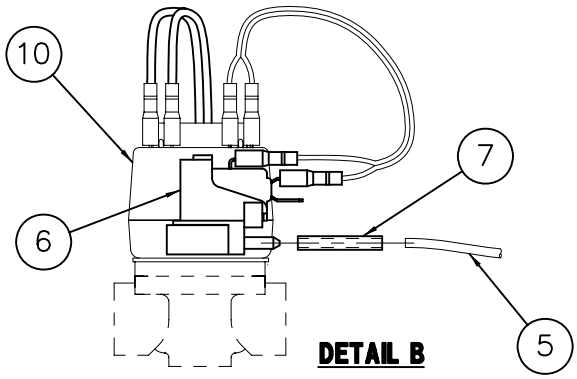

INSTALLATION INSTRUCTIONS:

A-UNIT SHIPS WITH PUSHBUTTONS ① INSTALLED TO COLUMN. SHOWER HEADS ② SHIP WITH RISER TUBING ③ ATTACHED.

B-SOLENOID VALVE ASSEMBLY ④ SHIPPED LOOSE, IS TO BE FIELD INSTALLED ABOVE COLUMN SHOWER WITHIN SUPPLY COVER. VALVE ASSEMBLY IS HELD IN PLACE BY SUPPLY PIPING.

C-MOUNT SOLENOID VALVE ASSEMBLY ④ WITHIN SUPPLY COVER OR CEILING. MAXIMUM RECOMMENDED DISTANCE OF 10 FT. FROM SHOWER HEAD. ROTATE VALVE FOR TOP OR BOTTOM SUPPLIES.

D-CONNECT 1/8" O.D. POLYETHYLENE AIR LINES ⑤ FROM PUSH-BUTTONS ① TO MOMENTARY AIR SWITCH ⑥ USING 3/16" O.D. TUBING ⑦ AS SHOWN IN DETAIL 'B'.

E-CONNECT 1/4" O.D. POLYETHYLENE WATER LINE ③ TO SHOWER HEAD ② AND VALVE ASSEMBLY ④. HAND-TIGHTEN USING FERRULE NUTS PROVIDED.

F-MOUNT ELECTRONIC VALVE CONTROLLER ⑧ WITHIN 50 FEET OF SOLENOID VALVE ASSEMBLY ④. CONNECT 6-CONDUCTOR PHONE CABLE ⑨ (15 FT. PROVIDED) FROM ELECTRONIC VALVE CONTROLLER ⑧ AT THE POSITION MARKED "STATIONS" TO THE TERMINAL AT BRANCH-BOX ⑩. RJ-12 PLUGS ARE NECESSARY ON EACH END OF PHONE CABLE.

G-CONNECT WIRES FROM TRANSFORMER (24VAC) ⑪ TO THE ELECTRONIC VALVE CONTROLLER ⑨. ASSEMBLE USING WIRE CONNECTORS PROVIDED.

H-AFTER THOROUGHLY FLUSHING THE SUPPLY LINE, MAKE-UP SUPPLY CONNECTION (3/4" NCT) ⑫.

NOTE:

WATER FLOW PRESSURE 25/100 PSI MIN/MAX. RECOMMENDED OUTLET TEMPERATURE 105°F MAX. FLUSH ALL SUPPLY LINES THOROUGHLY BEFORE CONNECTING. DRAIN VALVE PRIOR TO FREEZING TEMPERATURES. TRANSFORMER MUST BE WIRED TO GFI PROTECTED CIRCUIT. FIXTURE MUST BE EARTH GROUNDED PER NATIONAL ELECTRICAL CODE.

GENERAL NOTES:

1. DO NOT CRIMP OR CUT VALVE WIRE WHILE IT IS STILL CONNECTED TO THE CONTROLLER.
2. ALL WIRES SHOULD BE TESTED FOR CONTINUITY SHORT CIRCUIT BEFORE INSTALLATION.
3. ALL WIRES MUST BE CRIMPED PROPERLY BEFORE INSTALLATION.

ACORN ENGINEERING COMPANY
P.O. BOX 3527 INDUSTRY, CA. 91744
(626) 336-4561 FAX (626) 961-2200

TITLE		
CAPITAL COLUMN SHOWER WITH SINGLE TEMP MASTER-TROL VALVE (-EVS-1)		
MANUFACTURE DATE	DATE ISSUED	DRAWING NUMBER
APRIL 1, 1998 TO PRESENT	**01/01/93**	**9900-260-001**
	DATE REVISED **06/03/11**	

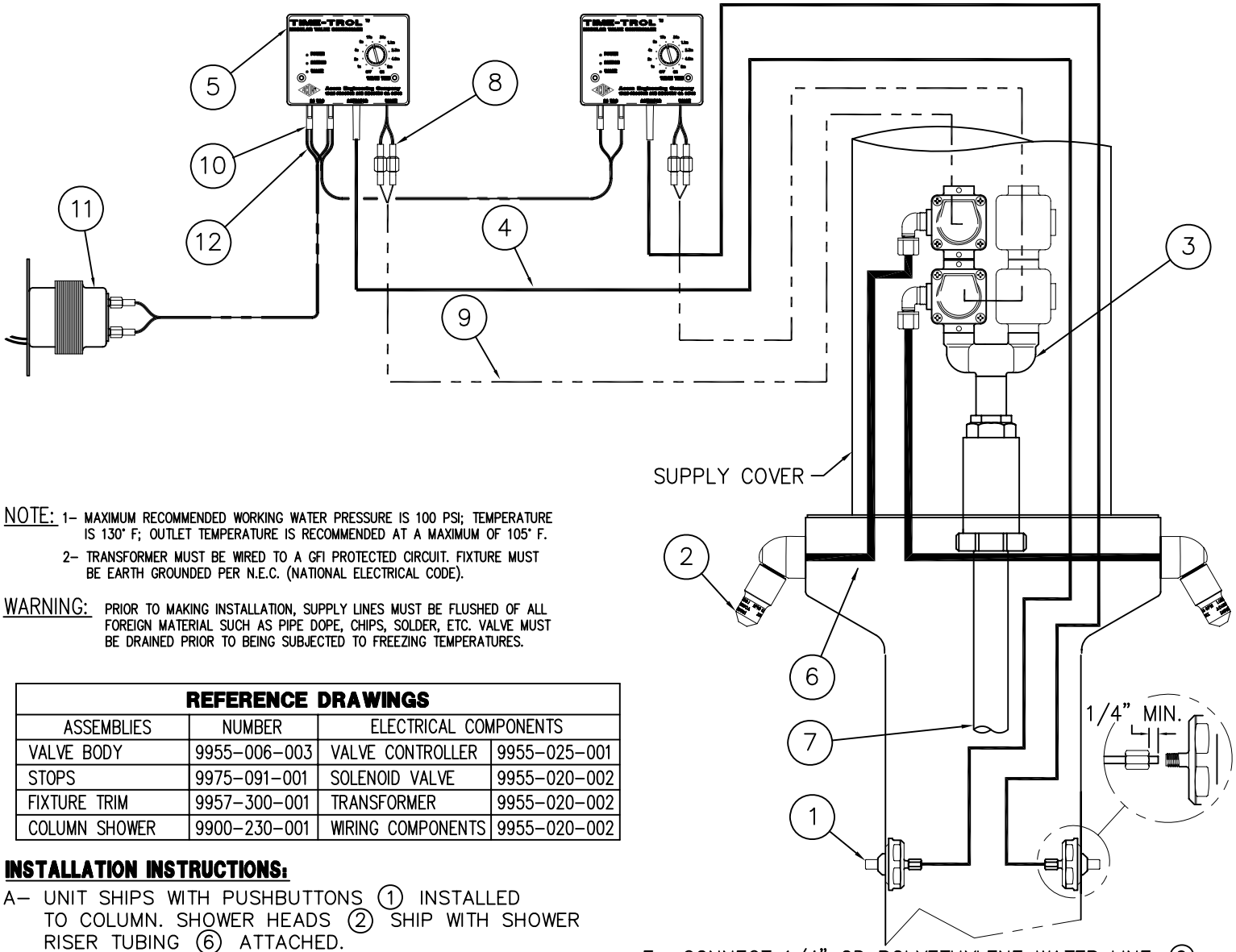

NOTE: 1– MAXIMUM RECOMMENDED WORKING WATER PRESSURE IS 100 PSI; TEMPERATURE IS 130° F; OUTLET TEMPERATURE IS RECOMMENDED AT A MAXIMUM OF 105° F.

2– TRANSFORMER MUST BE WIRED TO A GFI PROTECTED CIRCUIT. FIXTURE MUST BE EARTH GROUNDED PER N.E.C. (NATIONAL ELECTRICAL CODE).

WARNING: PRIOR TO MAKING INSTALLATION, SUPPLY LINES MUST BE FLUSHED OF ALL FOREIGN MATERIAL SUCH AS PIPE DOPE, CHIPS, SOLDER, ETC. VALVE MUST BE DRAINED PRIOR TO BEING SUBJECTED TO FREEZING TEMPERATURES.

REFERENCE DRAWINGS			
ASSEMBLIES	NUMBER	ELECTRICAL COMPONENTS	
VALVE BODY	9955–006–003	VALVE CONTROLLER	9955–025–001
STOPS	9975–091–001	SOLENOID VALVE	9955–020–002
FIXTURE TRIM	9957–300–001	TRANSFORMER	9955–020–002
COLUMN SHOWER	9900–230–001	WIRING COMPONENTS	9955–020–002

INSTALLATION INSTRUCTIONS:

A– UNIT SHIPS WITH PUSHBUTTONS ① INSTALLED TO COLUMN. SHOWER HEADS ② SHIP WITH SHOWER RISER TUBING ⑥ ATTACHED.

B– SOLENOID VALVE ASSEMBLY ③ SHIPPED LOOSE, IS TO BE FIELD INSTALLED ABOVE COLUMN WITHIN SUPPLY COVER. VALVE ASSEMBLY IS HELD IN PLACE BY SUPPLY PIPING.

C– MOUNT THE SOLENOID VALVE ASSEMBLY ③ WITHIN SUPPLY COVER OR CEILING (MAX. 10 FT. FROM SHOWER HEAD). ROTATE VALVE ASSEMBLY FOR TOP OR BOTTOM SUPPLIES.

D– LOCATE VALVE CONTROLLERS ⑤ (SEE NOTE). CONNECT 1/8" OD POLYETHYLENE AIR LINES ④ FROM PUSHBUTTONS ① TO VALVE CONTROLLERS ⑤. INSERT AIR LINE INTO VALVE CONTROLLER ⑤ AT POSITION MARKED "ACTUATOR". NOTE: LOCATE VALVE CONTROLLERS AS REQUIRED, A MAXIMUM OF 100 FEET FROM FIXTURE, OR INSIDE SUPPLY COVER. RUN WIRING / TUBING THRU SUPPLY COVER OR COLUMN. NOTE: TRANSFORMER MAY BE MOUNTED w/CONTROLLERS.

E– CONNECT 1/4" OD POLYETHYLENE WATER LINE ⑥ TO SHOWER HEAD ② AND VALVE ASSEMBLY ③ HAND–TIGHTEN USING FERRULE NUTS PROVIDED.

F– CONNECT WIRES ⑧ FROM VALVE CONTROLLER MARKED "VALVE" TO WIRES ⑨ FROM SOLENOID VALVE. ASSEMBLE USING WIRE CONNECTORS PROVIDED.

G– CONNECT WIRES FROM TRANSFORMER (24VAC) ⑪ TO VALVE CONTROLLER ⑩. ASSEMBLE USING WIRE CONNECTORS PROVIDED.

ASSEMBLE 24VAC WIRES TO ADDITIONAL VALVE CONTROLLERS IN PARALLEL BY ATTACHING JUMPER WIRE TO SPADE CONNECTOR FITTINGS ⑫.

H– AFTER THOROUGHLY FLUSHING THE SUPPLY LINES, MAKE UP SUPPLY CONNECTIONS (3/4" NCT) ⑦.

I– SET TIMING ON VALVE CONTROLLER AT DESIRED SETTING FOR FLOW DURATION.

ACORN ENGINEERING COMPANY
P.O. BOX 3527 INDUSTRY, CA. 91744
(626) 336–4561 FAX (626) 961–2200

TITLE		
CAPITAL COLUMN SHOWER WITH SINGLE TEMP TIME-TROL VALVE (-MVC-1)		
MANUFACTURE DATE	DATE ISSUED	DRAWING NUMBER
MAY 1994 TO PRESENT	**12/6/95**	**9900-233-001**
	DATE REVISED **07/19/11**	

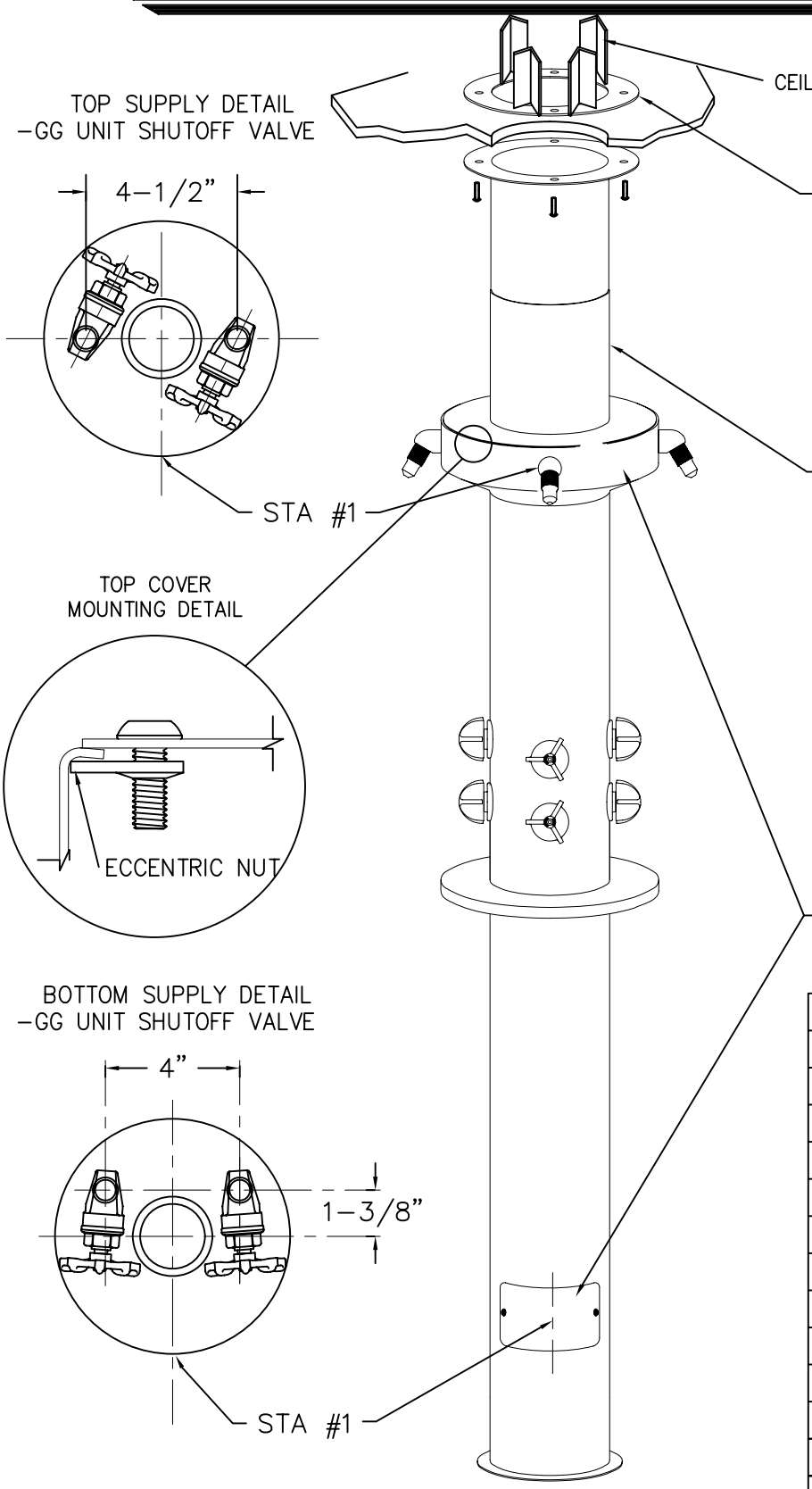

OPTIONAL –CA CEILING ANCHOR PLATE WITH VANDAL RESISTANT SCREWS. THIS OPTION IS RECOMMENDED FOR ATTACHING AN OPTIONAL –SC SUPPLY COVER TO A SUSPENDED CEILING. WHEN SPECIFIED THE CONTRACTOR MUST PROVIDE A SECURE MOUNTING TO THE UNDERSIDE OF THE CEILING ABOVE SO THAT THIS ANCHOR PLATE WILL BE SET FLUSH WITH THE SURFACE OF THE FINISHED CEILING. WHEN INSTALLED IN THIS MANNER THE CEILING ANCHOR PLATE PROVIDES A SECURE, FIRM BASE FOR THE SUPPLY COVER.

OPTIONAL –SC TELESCOPING SUPPLY COVER IS RECOMMENDED ON TOP SUPPLY AND/OR VENT THRU MODELS, IN ORDER TO CONCEAL THE VENT AND/OR SUPPLY PIPING. THE LOWER ASSEMBLY INCLUDES THE TOP COVER AND IS ATTACHED TO THE SPRAYHEAD WITH VANDAL RESISTANT SCREWS AND ECCENTRIC NUTS. THE UPPER PORTION ALLOWS ±2" OF ADJUSTMENT AND ATTACHES TO THE CEILING WITH FASTENERS BY OTHERS. SUFFIX –CA CEILING ANCHOR PLATE, SHOULD ALWAYS BE USED WHEN SUSPENDED CEILINGS ARE INVOLVED.

IMPORTANT: SUPPLY COVER MUST BE INSTALLED PRIOR TO CONNECTING SUPPLY OR VENT PIPING.

OPTIONAL –GG UNIT SHUTOFF VALVES ARE RECOMMENDED FOR ALL INSTALLATIONS. SEE APPLICABLE INSTALLATION DRAWINGS FOR ADDITIONAL ROUGH–IN DETAILS AS SHOWN BELOW:

REFERENCE DRAWING	
INSTALLATION	
B11–NO HUB DOME GRATE	9900–200–002
B15/T15 WITH DOME GRATE	9900–205–002
B21 INTEGRAL DRAIN BASE	9900–210–002
B25/T25 VENT THRU COLUMN	9900–215–002
T21 INTEGRAL DRAIN BASE	9900–220–002
T11 TOP SUPPLY DOME GRATE	9900–225–002
REPAIR PARTS	
B21/T21 3" VENT OFF	9974–000–001
B21/T21 –FO 4" VENT OFF	9974–001–001
B25/T25 3" VENT THRU	9974–005–001
B11/T11 VENT OFF D. GRATE	9974–010–001
B15/T15 VENT THRU D. GRATE	9974–015–001

ACORN ENGINEERING COMPANY
P.O. BOX 3527 INDUSTRY, CA. 91744
(626) 336–4561 FAX (626) 961–2200

TITLE **SUFFIX OPTIONS, -CA, -GG AND -SC FOR COLUMN SHOWERS**

MANUFACTURE DATE	DATE ISSUED	DRAWING NUMBER
APRIL 1992 TO PRESENT	**04/01/92**	**9900-240-001**
	DATE REVISED **07/29/11**	

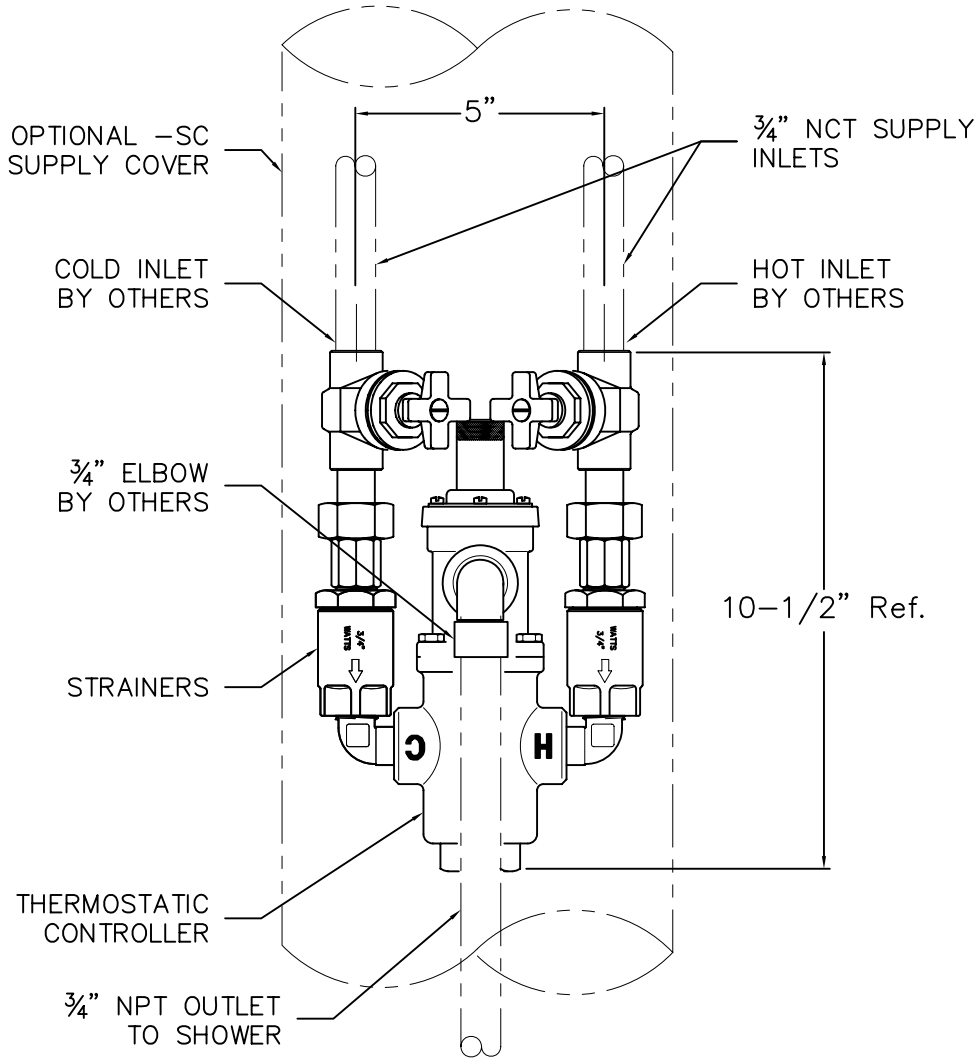

NOTE: MAXIMUM WATER INLET PRESSURE IS 100 PSI. MINIMUM INLET TEMPERATURE IS 200 DEGREES.

INSTALLATION INSTRUCTIONS:

A– ROUGH–IN SHOWER SUPPLIES PER APPROPRIATE INSTALLATION DETAIL.

B– OPTIONAL –TC THERMOSTATIC CONTROLLER IS SHIPPED LOOSE. VALVE IS INTENDED FOR INSTALLATION WITHIN –SC SUPPLY INLET CONNECTIONS (USE CAUTION TO AVOID OVERHEATING THE STOP BODY CARTRIDGE).

C– CONNECT ¾" NPT OUTLET LINE FROM –TC TO SHOWER MANIFOLD SUPPLY INLET. FOR HOT AND COLD CONTROL VALVE MODELS CONNECT OUTLET TO THE HOT SIDE SUPPLY INLET.

D– OPTIONAL –TC VALVE OUTLET TEMPERATURE CAN BE ADJUSTED FROM 65 TO 115 DEGREES. RECOMMENDED OUTLET TEMPERATURE.

ACORN ENGINEERING COMPANY
P.O. BOX 3527 INDUSTRY, CA. 91744
(626) 336–4561 FAX (626) 961–2200

TITLE		
-TC THERMOSTATIC CONTROLLER VALVE FOR TOP SUPPLY UNITS		
MANUFACTURE DATE	DATE ISSUED	DRAWING NUMBER
APRIL 1980 TO PRESENT	**7/15/97**	**9900-242-001**
	DATE REVISED **07/27/11**	

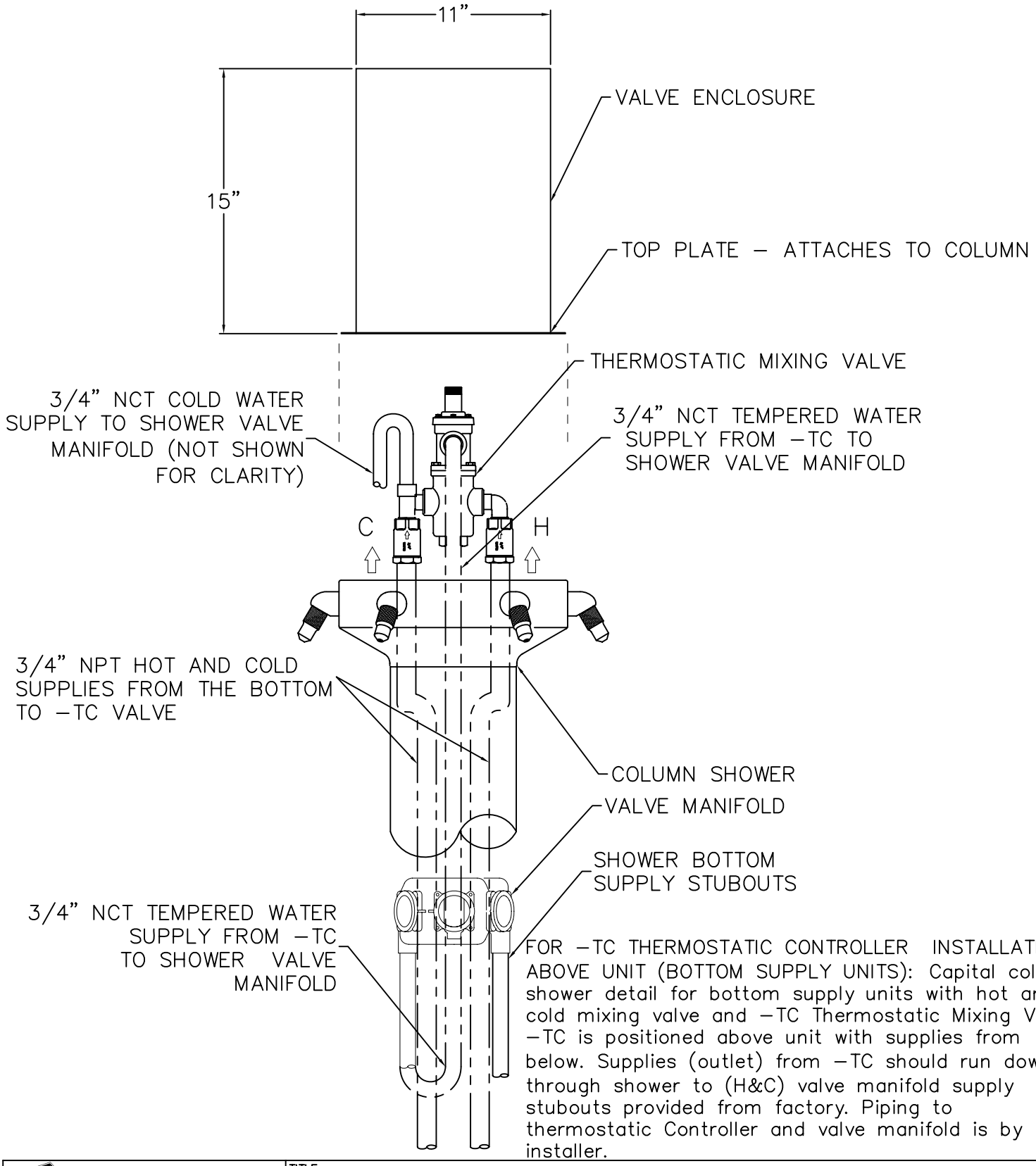

FOR –TC THERMOSTATIC CONTROLLER INSTALLATION ABOVE UNIT (BOTTOM SUPPLY UNITS): Capital column shower detail for bottom supply units with hot and cold mixing valve and –TC Thermostatic Mixing Valve. –TC is positioned above unit with supplies from below. Supplies (outlet) from –TC should run down through shower to (H&C) valve manifold supply stubouts provided from factory. Piping to thermostatic Controller and valve manifold is by installer.

ACORN ENGINEERING COMPANY
P.O. BOX 3527 INDUSTRY, CA. 91744
(626) 336–4561 FAX (626) 961–2200

TITLE		
-TC THERMOSTATIC CONTROLLER INSTALL FOR MIXING VALVES		
MANUFACTURE DATE	DATE ISSUED	DRAWING NUMBER
APRIL 1980 TO PRESENT	**7/28/98**	**9900-244-001**
	DATE REVISED **07/29/11**	

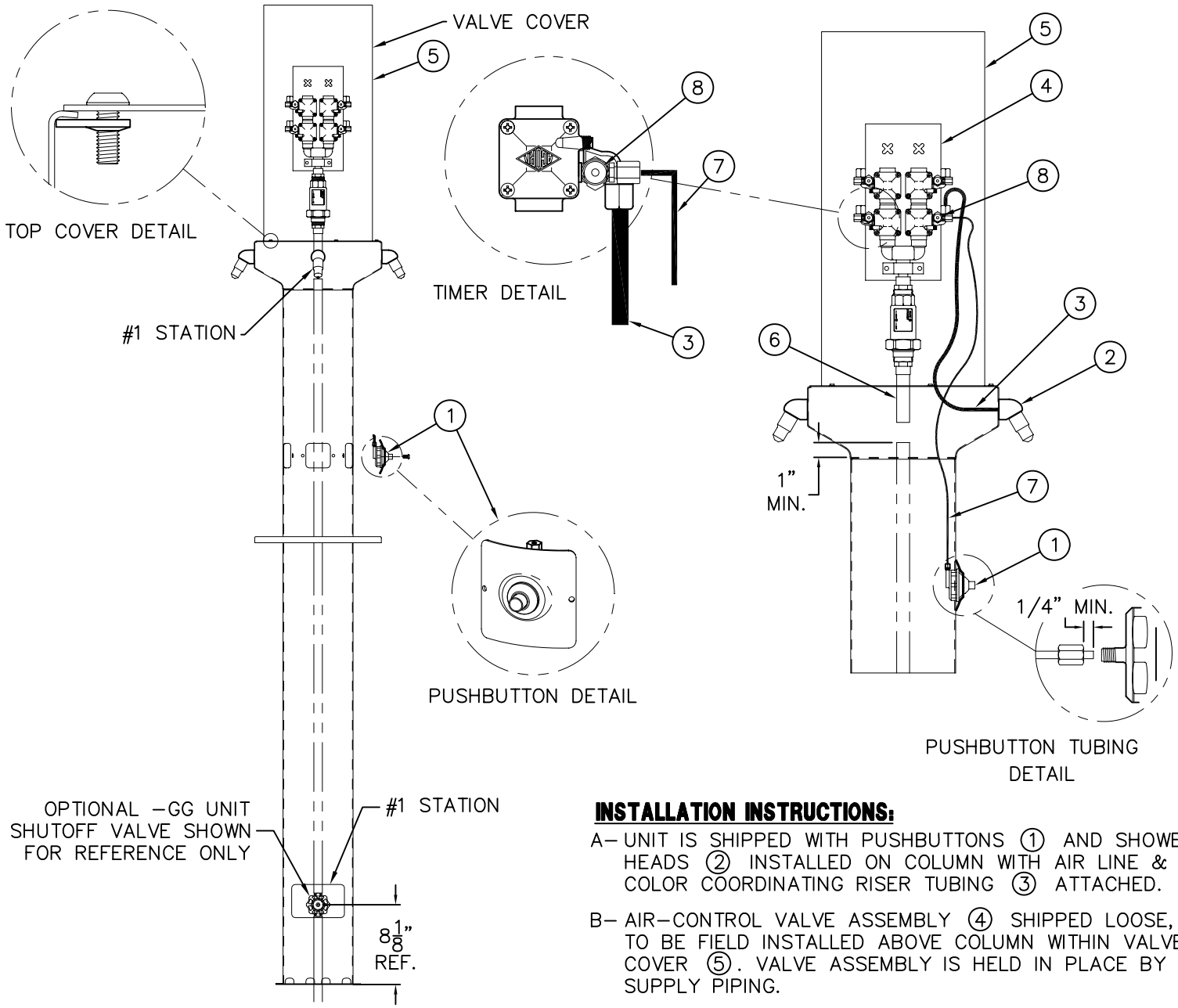

REFERENCE DRAWING	
AIR–CONTROL CONNE	9900–006–003

NOTE:

MAXIMUM RECOMMENDED WORKING WATER PRESSURE IS 100 PSI; TEMPERATURE IS 130° F; OUTLET TEMPERATURE IS RECOMMENDED AT A MAXIMUM OF 105° F.

WARNING:

PRIOR TO MAKING INSTALLATION, SUPPLY LINES MUST BE FLUSHED OF ALL FOREIGN MATERIAL SUCH AS PIPE DOPE, CHIPS, SOLDER, ETC. VALVE MUST BE DRAINED PRIOR TO BEING SUBJECTED TO FREEZING TEMPERATURES.

INSTALLATION INSTRUCTIONS:

A– UNIT IS SHIPPED WITH PUSHBUTTONS ① AND SHOWER HEADS ② INSTALLED ON COLUMN WITH AIR LINE & COLOR COORDINATING RISER TUBING ③ ATTACHED.

B– AIR–CONTROL VALVE ASSEMBLY ④ SHIPPED LOOSE, TO BE FIELD INSTALLED ABOVE COLUMN WITHIN VALVE COVER ⑤. VALVE ASSEMBLY IS HELD IN PLACE BY SUPPLY PIPING.

C– AFTER THOROUGHLY FLUSHING SUPPLY LINE, MAKE UP CONNECTION TO 3/4" NCT STRAINER INLET ⑥.

D– CONNECT 1/8" OD POLYETHYLENE AIR LINES ⑦ FROM PUSHBUTTON ① TO VALVE TIMER ⑧.

E– CONNECT 1/4" OD POLYETHYLENE WATER LINE ③ FROM SHOWER HEADS ② TO VALVE ASSEMBLY ④, HAND–TIGHTEN USING FERRULE NUTS PROVIDED. REPEAT THIS PROCEDURE AT EACH STATION.

F– WITH VALVE COVER ⑤ REMOVED, ADJUST VALVE TIMING AT TIMER ASSEMBLY ⑧. TIMING IS ADJUSTABLE FROM 5 TO 60 SECONDS.

ACORN ENGINEERING COMPANY
P.O. BOX 3527 INDUSTRY, CA. 91744
(626) 336–4561 FAX (626) 961–2200

TITLE		
CAPITAL SHOWER w/ -B BOTTOM SUPPLY, AIR-CONTROL & -VC VALVE COVER		
MANUFACTURE DATE **JANUARY 1994 TO PRESENT**	DATE ISSUED **11/30/09** DATE REVISED **07/22/11**	DRAWING NUMBER **9900-232-001**

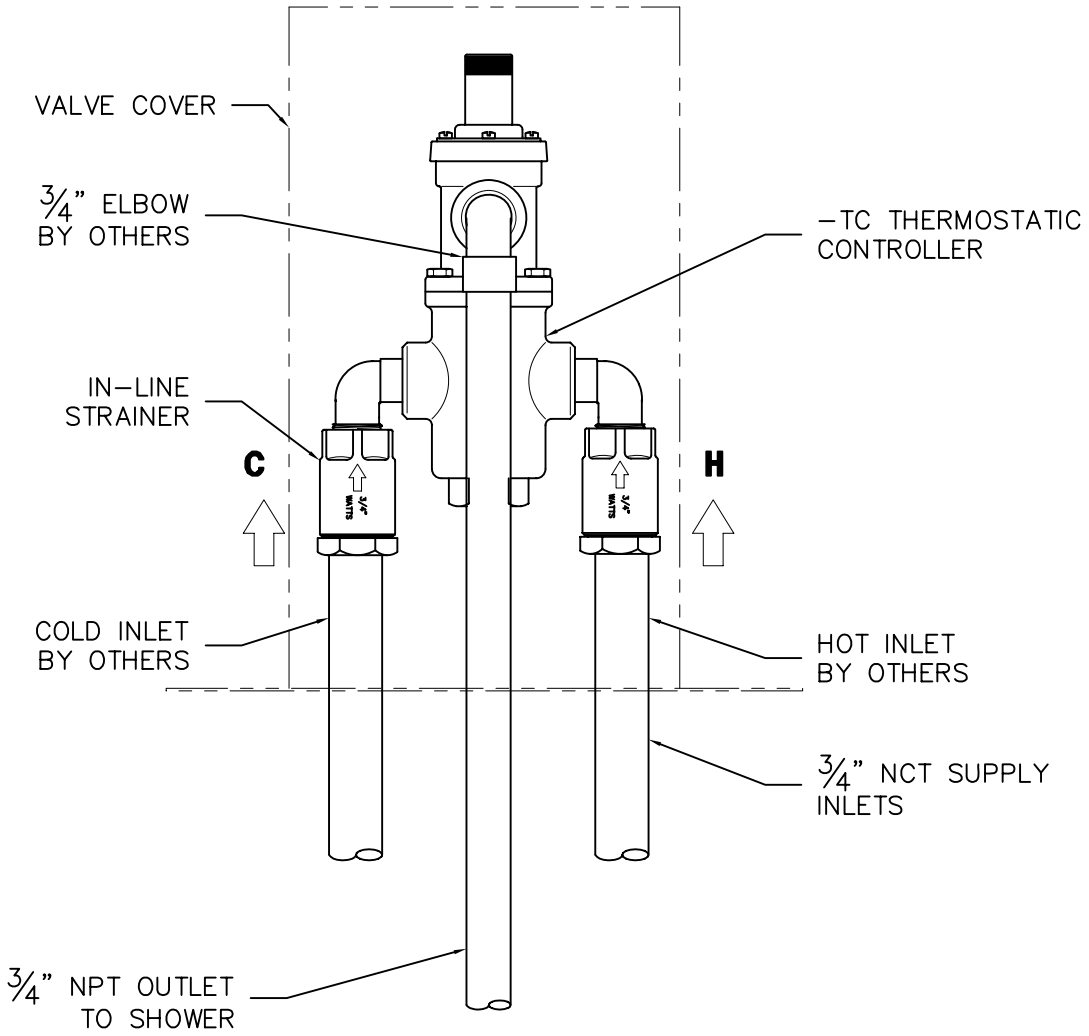

NOTE: MAXIMUM WATER INLET PRESSURE IS 100 PSI. MINIMUM INLET TEMPERATURE IS 200 DEGREES.

INSTALLATION INSTRUCTIONS:

A- ROUGH-IN SHOWER SUPPLIES PER APPROPRIATE INSTALLATION DETAIL.

B- OPTIONAL -TC THERMOSTATIC CONTROLLER IS SHIPPED LOOSE. VALVE IS INTENDED FOR FIELD INSTALLATION ABOVE SPRAYHEAD WITH SUPPLIES FROM BELOW.

C- CONNECT 3/4" NPT OUTLET LINE FROM -TC TO SHOWER MANIFOLD HOT SIDE SUPPLY INLET. TEMPERED WATER FROM -TC SHOULD RUN DOWN THROUGH SHOWER COLUMN TO (H&C) VALVE MANIFOLD

D- 3/4" NCT PIPING CONNECTION TO THERMOSTATIC CONTROLLER AND VALVE MANIFOLD IS BY INSTALLER

ACORN ENGINEERING COMPANY
P.O. BOX 3527 INDUSTRY, CA. 91744
(626) 336-4561 FAX (626) 961-2200

TITLE		
-TC THERMOSTATIC CONTROLLER VALVE FOR BOTTOM SUPPLY UNITS		
MANUFACTURE DATE	DATE ISSUED	DRAWING NUMBER
APRIL 1980 TO PRESENT	07/29/11	9900-243-001
	DATE REVISED	

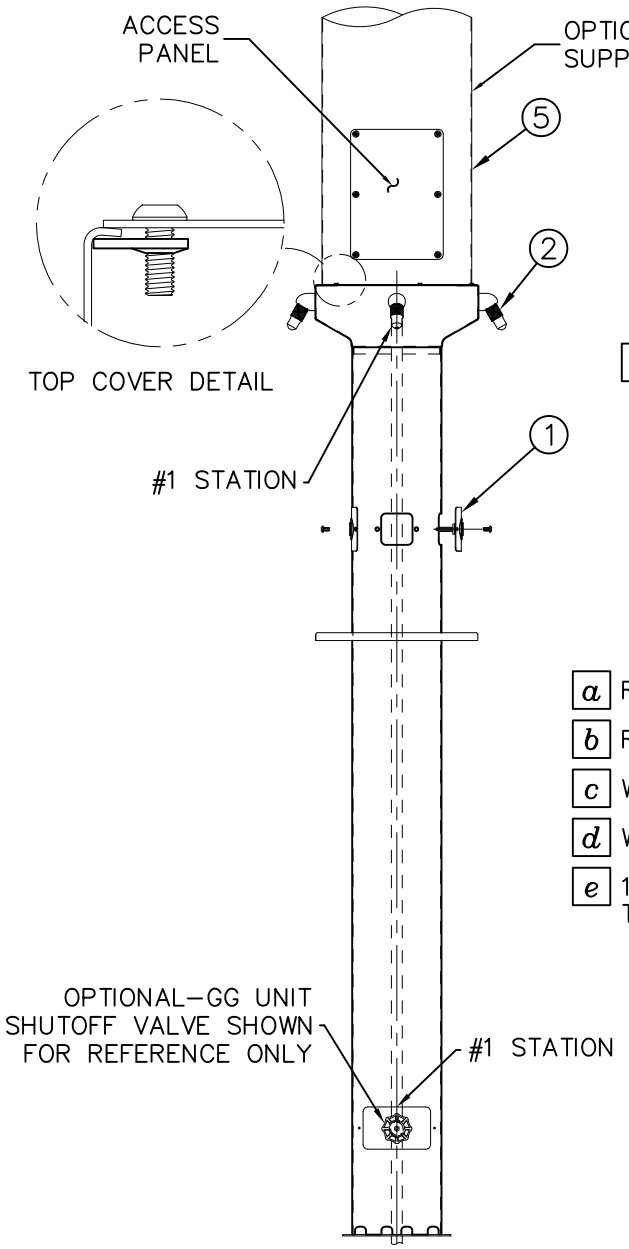

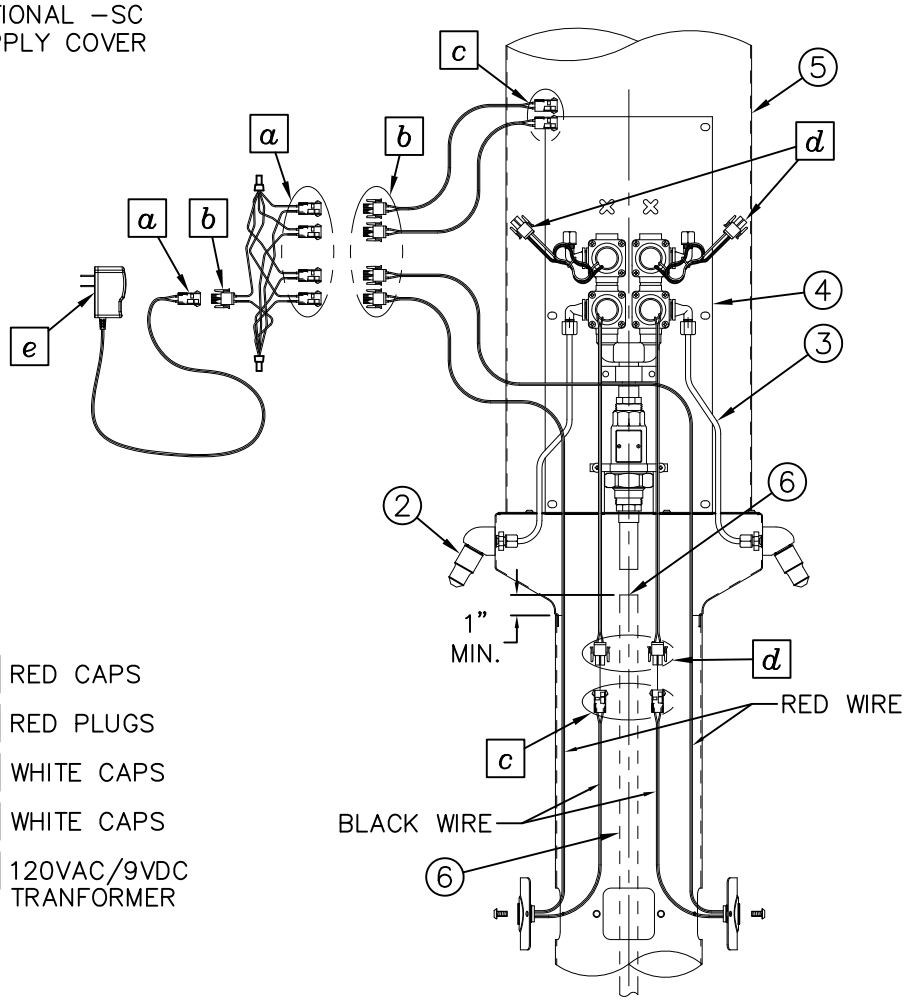

- a RED CAPS
- b RED PLUGS
- c WHITE CAPS
- d WHITE CAPS
- e 120VAC/9VDC TRANFORMER

REFERENCE DRAWING	
–PPZ 9VDC PARTS	9955–019–002
–PPZ PROGRAMMING	9940–009–001

INSTALLATION INSTRUCTIONS:

A– UNIT IS SHIPPED WITH PUSHBUTTONS (1) AND SHOWER HEADS (2) INSTALLED ON COLUMN WITH 1/4" O.D. RISER TUBING (3) ATTACHED.

B– SOLENOID VALVE ASSEMBLY (4) SHIPPED LOOSE TO BE FIELD INSTALLED ABOVE COLUMN WITHIN SUPPLY COVER (5). VALVE ASSEMBLY IS HELD IN PLACE BY SUPPLY PIPING (6) BY OTHERS.

C– AFTER THOROUGHLY FLUSHING SUPPLY LINE, MAKE UP SUPPLY CONNECTION (6) (3/4" NCT).

D– POSITION THE SOLENOID VALVE ASSEMBLY (4) WITHIN SUPPLY COVER (5).

E– CONNECT 1/4" O.D. RISER TUBE (3) FROM SOENOID VALVE (4) TO SHOWERHEADS (2) HAND TIGHTEN FERRULE NUTS.

F– CONNECT SOLENOID VALVE, POWER SUPPLY AND PUSHBUTTON WIRING AS SHOWN ON DETAIL.

G– COMPLETE THE INSTALLATION OF THE UNIT ACCORDING TO THE UNITS INSTALLATION INSTRUCTIONS.

NOTE:

1– MAXIMUM RECOMMENDED WORKING WATER PRESSURE IS 100 PSI; TEMPERATURE IS 130° F; OUTLET TEMPERATURE IS RECOMMENDED AT A MAXIMUM OF 105° F.

2– PROVIDE 110–120VAC/60Hz/3A (MAX) ELECTRICAL SERVICE FOR FACTORY PROVIDED 120VAC/9VDC, 660mA PLUG–IN TRANSFORMER. TRANSFORMER MUST BE WIRED TO A GFI PROTECTED CIRCUIT. FIXTURE MUST BE EARTH GROUND PER N.E.C. (NATIONAL ELECTRIC CODE).

WARNING:

PRIOR TO MAKING INSTALLATION, SUPPLY LINES MUST BE FLUSHED OF ALL FOREIGN MATERIAL SUCH AS PIPE DOPE, CHIPS, SOLDER, ETC. VALVE MUST BE DRAINED PRIOR TO BEING SUBJECTED TO FREEZING TEMPERATURES.

ACORN ENGINEERING COMPANY
P.O. BOX 3527 Industry, CA 91744
15125 Proctor Ave Industry, CA 91746
(626) 336–4561 FAX (626) 961–2200

TITLE		
CAPITAL SHOWER -B BOTTOM SUPPLY w/ -PPZ PROGRAM PIEZO PUSHBUTTON		
MANUFACTURE DATE	DATE ISSUED	DRAWING NUMBER
OCTOBER 2013 TO PRESENT	**10/25/13**	**9900-235-001**
	DATE REVISED	

Programable Piezo Pushbutton Programming Instructions (Flow Time Adjustment)

The Button is factory set an 8 sec. timing cycle, if an 8 sec. cycle is adequate, then **no** programming adjustment is required.

NOTE: Read the entire document before trying to program the piezo pushbutton.

THE TIME SETTINGS PROGRAM USES 3 DIFFERENT TIMING MODES:

- **1 second timing mode:** Each push of the button adds 1 second to the total timing cycle.
- **5 second timing mode:** Each push of the button adds 5 seconds to the total timing cycle.
- **20 second timing mode:** Each push of the button adds 20 seconds to the total timing cycle.

To program the piezo pushbutton, you will need to be able to see the back of the piezo pushbutton.

Prevision must be made to access the back of the piezo pushbutton. There is an LED on the back of the piezo pushbutton under a layer of transparent epoxy, used as a programming indicator light.

NOTE: This programming procedure moves along rapidly, there is only about 2 or 3 seconds between programming operations.

In order to start the programming the piezo pushbutton, the button must be powered down. Disconnect the red power cable and wait 20 seconds, then reconnect the red power cable.

As soon as the cable is reconnected the LED will start flashing, it will flash 4 times, then stays on for 3 seconds. During the 3 second period, push the piezo button once, the LED will go out, now you are in the **1 sec timing mode** and each time the button is pushed the LED will flash, adding 1 sec to the total timing cycle.

To move on to the **5 sec timing mode**, pause and wait for the LED to flash 2 times, now you are in the 5 sec timing mode. Each time the button is pushed the LED will flash, adding 5 sec to the total timing cycle.

To move on to the **20 sec timing mode**, pause and wait for the LED to flash 3 times, now you are in the 20 sec timing mode and each time the button is pushed the LED will flash, adding 20 sec to the total timing cycle. After programing is complete, pause and wait for the LED to flash 4 times and then 5 times, which completes the programming.

- When a **timing mode is not required** then **do not** push the button and wait for the next timing mode.
- Each timing mode (1 sec, 5 sec or 20 sec timing mode) can be sequenced up to 100 times, that is the number of times, the button can be pushed, to increase the total timing cycle in each timing mode.

ACORN ENGINEERING FIELD SERVICE
TOLL FREE 800-743-8259 • **LOCAL** 626-855-4866 • **FAX** 626-855-4863

Please visit ***www.acorneng.com*** for most current specifications.

Programmable Piezo Pushbutton Programming Instructions (Flow Time Adjustment)

WORKSHEET
(FILL IN ALL BOXES, WHICH WILL SIMPLIFY THE PROGRAMMING PROCEDURE)

Fill in all the Boxes below

Determine the number of seconds per timing cycle

PROGRAMING STEPS:

- Power down piezo button for 10 seconds.
- Reconnect power.
- LED flashes, then stay on.
- While the LED is steady on, push button.
- LED turns off.

1 Push = 1 Second

x 1 = sec

- You are in the 1 sec timing mode, immediately push the button, 1 push equals 1 sec added to the total timing cycle.
- Pause and wait for the LED to flash 2 times.

ADD

1 Push = 5 Seconds

x 5 = sec

- You are in the 5 sec timing mode, immediately push the button, 1 push equals 5 sec added to the total timing cycle.
- Pause and wait for the LED to flash 3 times.

ADD

1 Push = 20 Seconds

x 20 = sec

- You are in the 20 sec timing mode, immediately push the button, 1 push equals 20 sec added to the total timing cycle.

EQUALS

Total timing cycle equals

seconds

ACORN ENGINEERING COMPANY

ACORN ENGINEERING FIELD SERVICE
TOLL FREE 800-743-8259 • **LOCAL** 626-855-4866 • **FAX** 626-855-4863

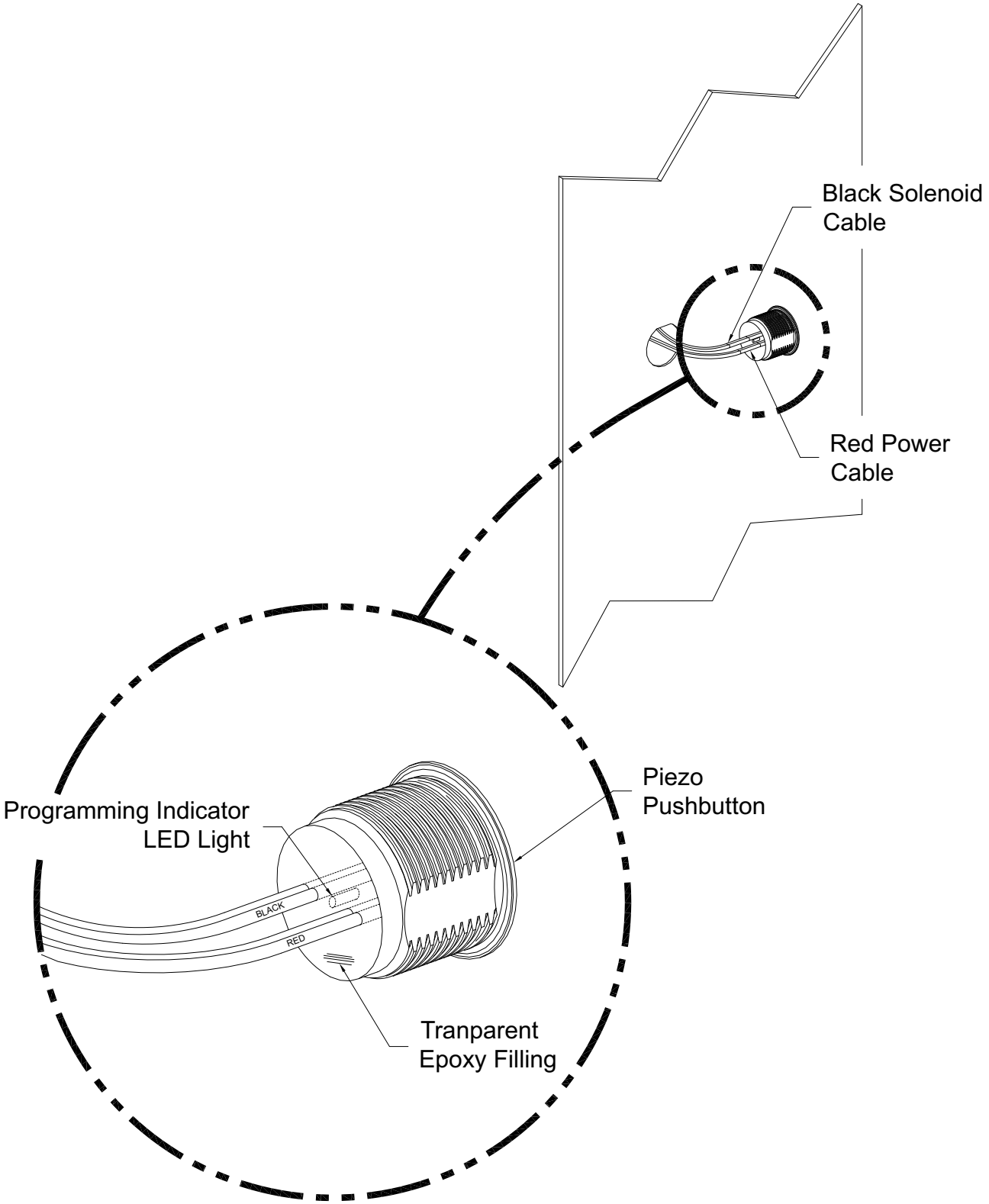
Black Solenoid
Cable
Red Power
Cable
Piezo
Pushbutton
Programming Indicator
LED Light
BLACK
RED
Tranparent
Epoxy Filling

REFERENCE DRAWINGS	
ASSEMBLIES	NUMBER
T/P VALVE	9975-005-002

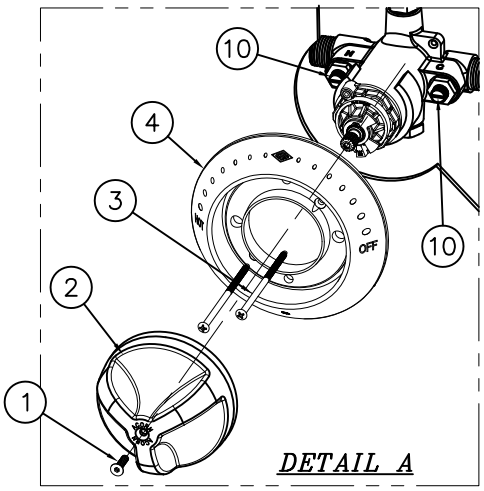

DETAIL A

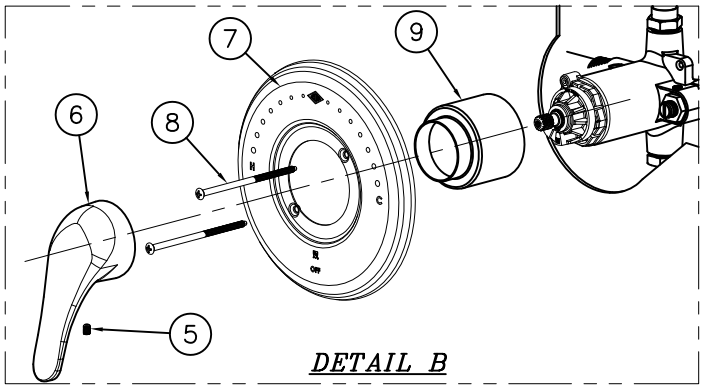

DETAIL B

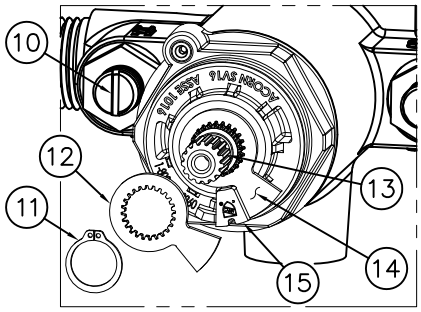

DETAIL C

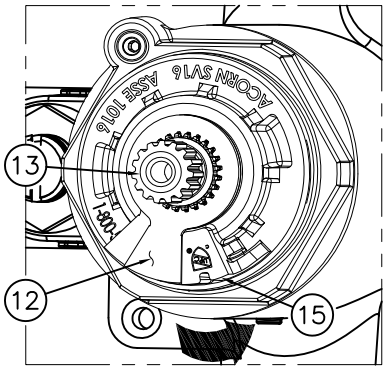

DETAIL D

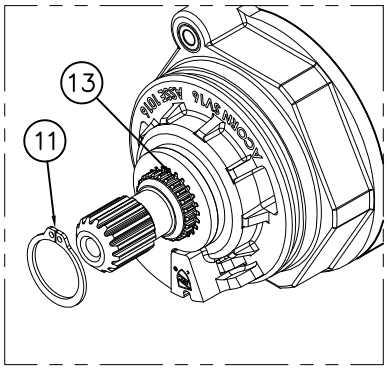

DETAIL E

INSTRUCTIONS:

A–REMOVE TRI–LEVER HANDLE TRIM: SEE DETAIL A

a–REMOVE HANDLE SCREW (1) AND REMOVE HANDLE (2).

b–REMOVE ESCUTCHEON (3) BY REMOVING SCREWS (4).

FOR OPTIONAL –LVR LEVER HANDLE TRIM: SEE DETAIL B

a–REMOVE SET SCREW (5) AND HANDLE (6).

b–REMOVE ESCUTCHEON (7) BY REMOVING SCREWS (8).

c–PULL OFF VALVE SLEEVE (9).

TEMPERATURE ADJUSTMENT:

B–ENSURE MAIN WATER SUPPLY IS ON.

C–ENSURE CHECK STOPS (10) ARE OPEN.

D–ENSURE VALVE IS IN THE OFF POSTION.

E–USING SNAP RING PLIERS REMOVE RETAINING RING (11) AND THE FIRST TEMPERATURE LIMIT WASHER (12) ONLY FROM VALVE STEM (13). SEE DETAIL C.

NOTE: IF SECOND TEMPERATURE LIMIT WASHER (14) COMES OFF, RESETTING OF THE OFF STOP MAY BE REQUIRED, KEY AS CLOSE AS POSSIBLE ON THE COUNTER–CLOCKWISE SIDE OF BONNET STOP (15). USING HANDLE (2) OR (6) SLIGHTLY OPEN AND CLOSE VALVE TO ENSURE WATER WILL SHUT OFF. DETAIL C.

TEMPERATURE ADJUSTMENT: *CONTINUED:*

F–USING HANDLE (2) OR (6) TURN VALVE STEM (13) COUNTER–CLOCKWISE TO INCREASE HOT, CHECKING OUTLET TEMPERATURE UNTIL DESIRED TEMPERATURE IS REACHED (RECOMMENDED 105° TO 110°). SLIDE FIRST TEMPERATURE LIMIT WASHER (8) OVER VALVE STEM (12) AND ENSURE SIDE OF WASHER RESTS AS CLOSE AS POSSIBLE TO CLOCKWISE SIDE OF BONNET LIMIT STOP (15). DETAIL D.

G–WITH VALVE IN THE "ON" POSTION AND WATER RUNNING, USING SNAP RING PLIERS INSTALL RETAINING RING (11). ENSURE RETAINING RING (11) IS INSERTED PROPERLY INTO GROOVE ON VALVE STEM (13). DETAIL E.

H–REINSTALL TRIM IN REVERSE ORDER.

ACORN ENGINEERING COMPANY
P.O. BOX 3527 Industry, CA 91744
15125 Proctor Ave Industry, CA 91746
(626) 336-4561 FAX (626) 961-2200

TITLE	-8 T/P TEMP/PRESS BALANCING MIXING VALVE - TEMPERATURE ADJUSTMENT	
MANUFACTURE DATE	DATE ISSUED	DRAWING NUMBER
APRIL 2014 PRESENT	05/01/14	9900-007-001
	DATE REVISED 08/25/14 A	

3/16