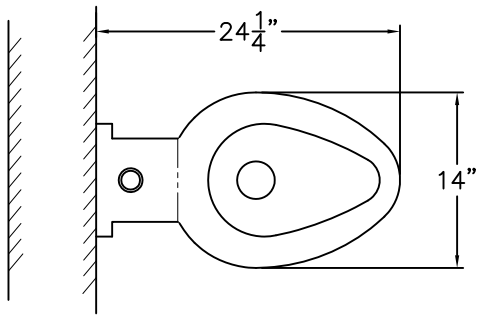

TOP VIEW

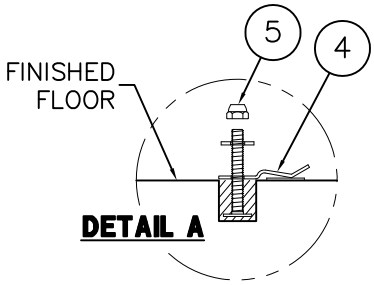

DETAIL A

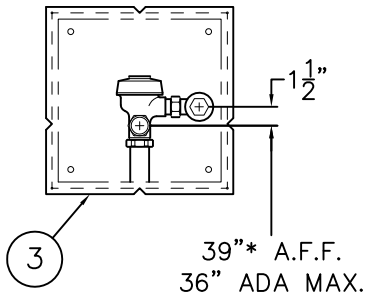

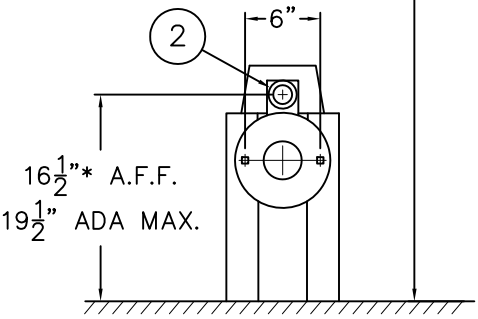

(-W) WALL SUPPLY REAR VIEW

FOR -ADA MODELS –FLUSH VALVE MUST BE HYDRAULICALLY ACTUATED OR SUPPLIED WITH A SPECIAL HANDLE. MAX. CONTROL HEIGHT IS 36" ABOVE FINISHED FLOOR. CONTROLS MUST BE LOCATED ON OPEN SIDE OF TOILET.

NOTE: REFER TO A.D.A. ACCESSIBILITY GUIDELINES FOR COMPLETE INSTALLATION REQUIREMENTS.

NOTE: FOR UNITS WITH SUFFIX OPTION –ADA, ALL VERTICAL DIMENSIONS INDICATED * WILL INCREASE PROPORTIONALLY WITH ADA SEAT HEIGHT.

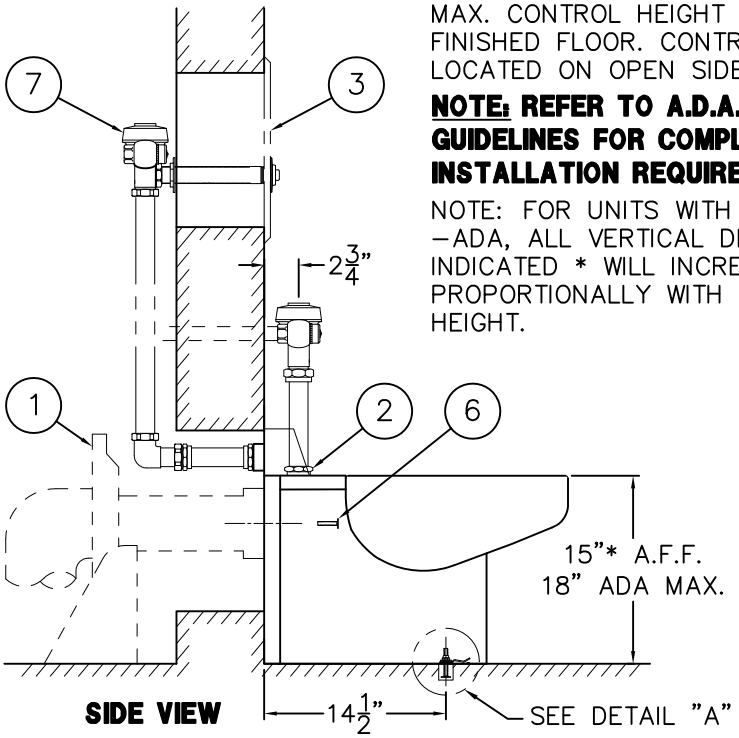

SIDE VIEW

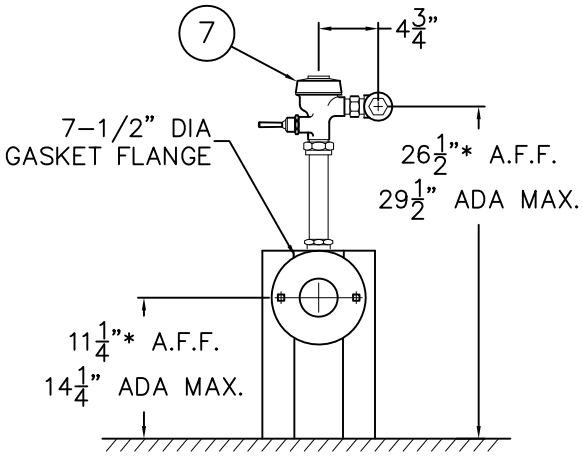

(-T) TOP SUPPLY REAR VIEW

NOTE: FOR UNITS WITH –W WALL SUPPLY FLUSH VALVE, ACCESS FOR CONNECTING AND SERVICING FLUSH VALVE IS REQUIRED.

INSTALLATION INSTRUCTIONS

A– WASTE FITTINGS ① BY OTHERS. THESE FITTINGS ARE NORMALLY FURNISHED COMPLETE WITH WASTE CONNECTION, SUPPORTING STUDS AND CAP NUTS. CONTACT SELECTED MANUFACTURER FOR DETAILS.

B– ROUGH–IN FOR FLUSHING INLET 1–1/2" NPT ②.

C– FOR DURA–WARE FLUSH VALVE ACCESS PANELS ③, FOR CONCEALED FLUSH VALVE INSTALLLATION REFER TO DRAWING #9908–399–001.

D– ATTACH CONCEALED FLOOR ANCHORS ④ WITH T–BOLT ASSY ⑤ PROVIDED. SEE DETAIL "A".

E– SLIDE FIXTURE TO THE WALL MAKING SURE TO ENGAGE CONCEALED FLOOR ANCHORS ④. INSTALL WITH 5/16" UNC FASTENERS ⑥ (BY OTHERS) AT WALL.

F– FLUSH SUPPLY LINE. MAKE–UP WASTE CONNECTION AND MOUNT FLUSH VALVE ⑦ PER MANUFACTURERS' RECOMMENDATIONS.

ACORN ENGINEERING COMPANY
P.O. BOX 3527 Industry, CA 91744
15125 Proctor Ave Industry, CA 91746
(626) 336–4561 FAX (626) 961–2200

TITLE		
BLOWOUT JET TOILET - ON THE FLOOR (CAT. #2110 & #2110-ADA)		
MANUFACTURE DATE	DATE ISSUED	DRAWING NUMBER
FEBRUARY 1975 TO PRESENT	**06/01/90**	**9908-405-001**
	DATE REVISED **04/08/13**	

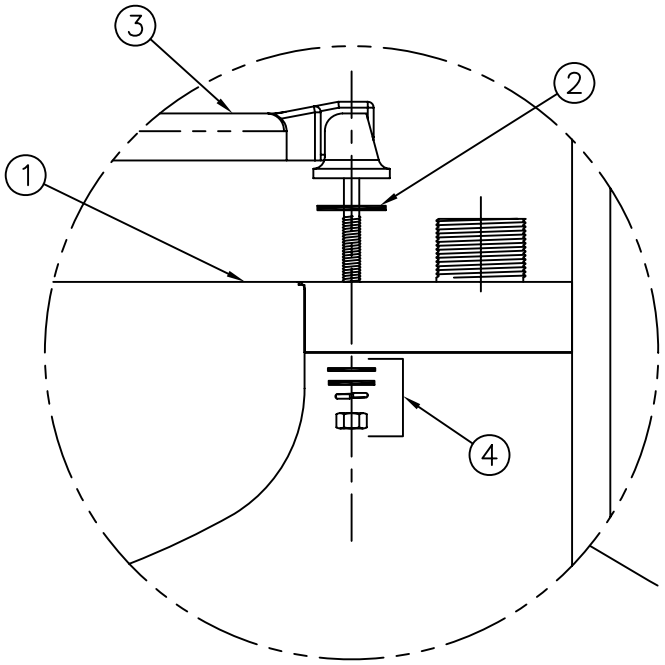

DETAIL "A"

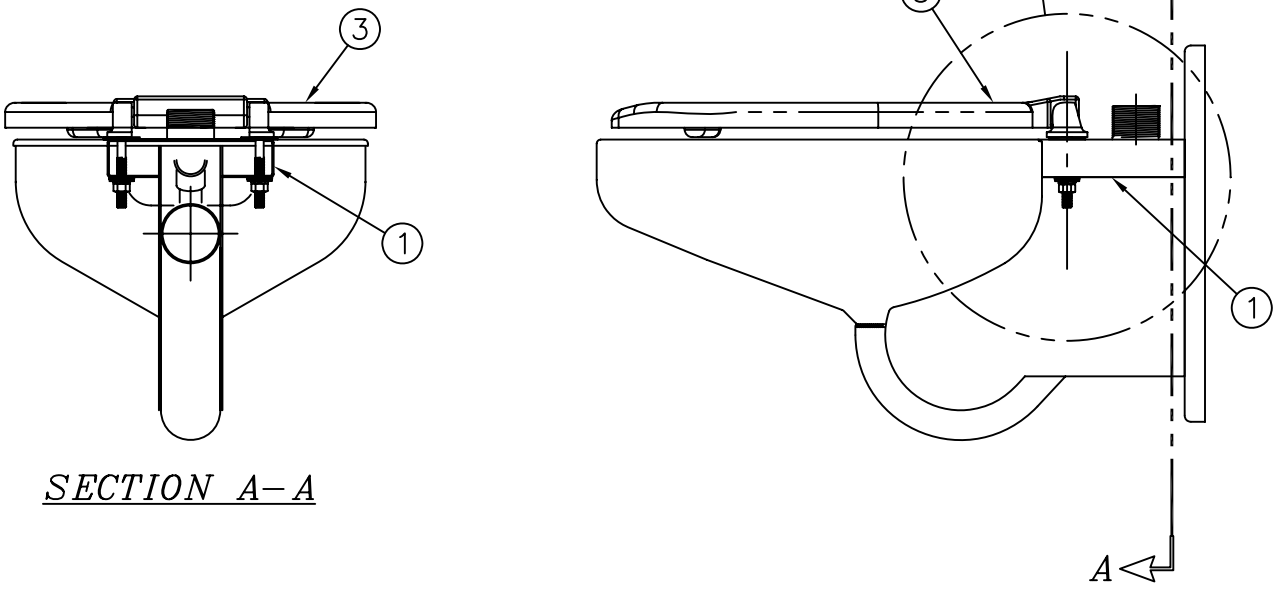

SECTION A–A

INSTALLATION INSTRUCTIONS-HINGED SEAT AFTER MOUNTING FIXTURE ON WALL:

A–LOCATE HINGED SEAT MOUNTING HOLES IN FIXTURE ①.

B–INSERT WASHERS ② BETWEEN TOP OF TOILET AND HINGE SEAT ③.

C–POSITION HINGED SEAT ③ ON TOP OF UNIT.

C–ASSEMBLE HARDWARE ④ AS SHOWN IN MOUNTING DETAIL "A".

ACORN ENGINEERING COMPANY
P.O. BOX 3527 INDUSTRY, CA. 91744
(626) 336–4561 FAX (626) 961–2200

TITLE -HS HINGED SEAT OPTION INSTALLATION DETAIL - TOILETS		
MANUFACTURE DATE **APRIL 2008** **TO PRESENT**	DATE ISSUED **04/09/08** DATE REVISED	DRAWING NUMBER **9908-415-001**

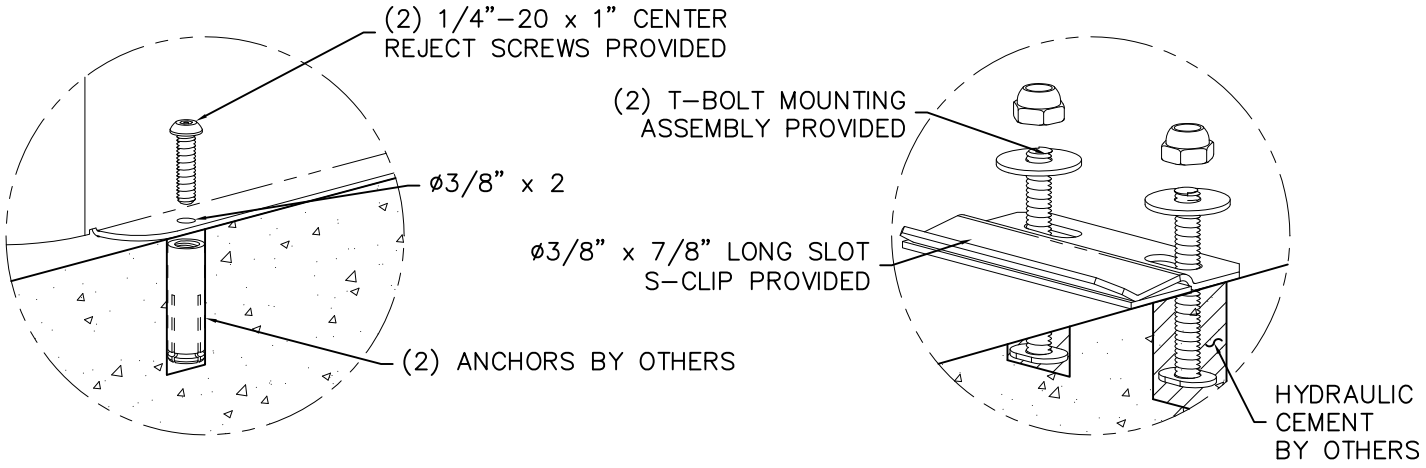

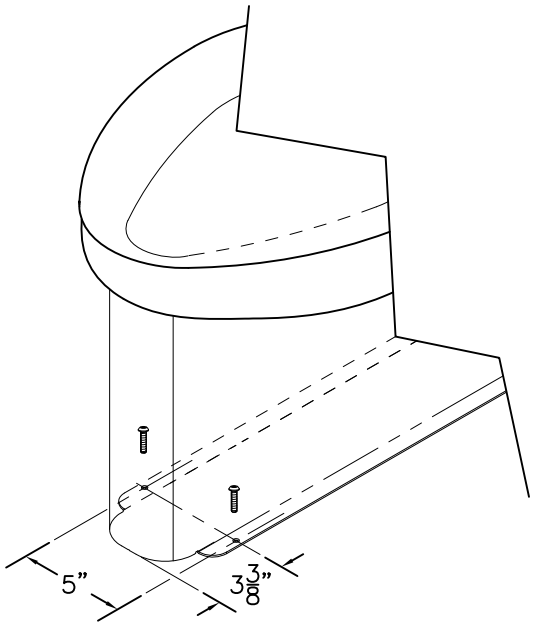

FLANGE MOUNTING

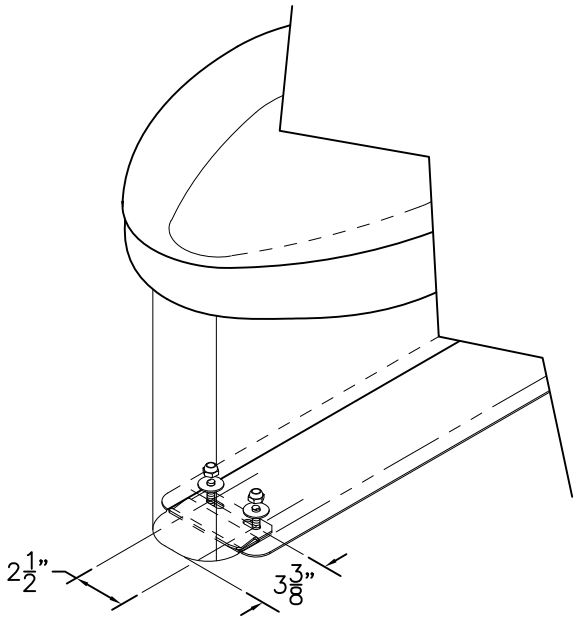

S-CLIP MOUNTING

–SS–SPS SUICIDE RESISTANT SKIRT OPTION IS PROVIDED WITH ADDITIONAL MOUNTING POINTS NOT NORMALLY PROVIDED WITH OUR STANDARD FIXTURES AND COME IN TWO STYLES AS INDICATED BELOW.

FIXTURES w/ FLANGE MOUNTING (DURA-WARE, REPLACE-WARE):

A–AFTER ROUGHING IN AS REQUIRED, PLACE FIXTURE IN POSITION AND USE AS TEMPLATE TO LOCATE AND MARK FLANGE POINTS ON FLOOR.

B–REMOVE FIXTURE AND INSTALL FLOOR ANCHORS BY OTHERS FOR 3/8" DIAMETER FLANGE PUNCHING.

C–ALIGN WALL AND FLOOR ANCHORING POINTS AND COMPLETE FIXTURE INSTALLATION AS INDICATED BY THE FIXTURE INSTALLATION SHEET PROVIDED.

FIXTURES w/ S-CLIP (PENAL-WARE, MERIDIAN):

A–AFTER ROUGHING IN AS REQUIRED, PLACE FIXTURE IN POSITION AND USE AS A TEMPLATE TO LOCATE AND MARK S–CLIP MOUNTING LOCATION ON FLOOR AS INDICATED.

B–REMOVE FIXTURE, INSTALL T–BOLTS FOR S–CLIP 3/8" x 7/8" LONG MOUNTING SLOTS AND SECURE WITH HYDRAULIC CEMENT (BY OTHERS)

C–INSTALL S–CLIP

D–PLACE FIXTURE ON FLOOR POSITIONING THE "NOSE" OF THE SKIRT SEVERAL INCHES IN FRONT OF S–CLIP MOUNTING LOCATION, SLIDE FIXTURE INTO PLACE ENGAGING THE S–CLIP AND ALIGNING WALL MOUNTING LOCATIONS. COMPLETE FIXTURE INSTALLATION AS INDICATED BY THE FIXTURE INSTALLATION SHEET PROVIDED.

ACORN ENGINEERING COMPANY
P.O. BOX 3527 Industry, CA 91744
15125 Proctor Ave Industry, CA 91746
(626) 336–4561 FAX (626) 961–2200

TITLE -SPS MOUNTING DETAIL		
MANUFACTURE DATE AUGUST 2012 TO PRESENT	DATE ISSUED 08/15/12 DATE REVISED 11/05/13 A	DRAWING NUMBER 9925-007-001

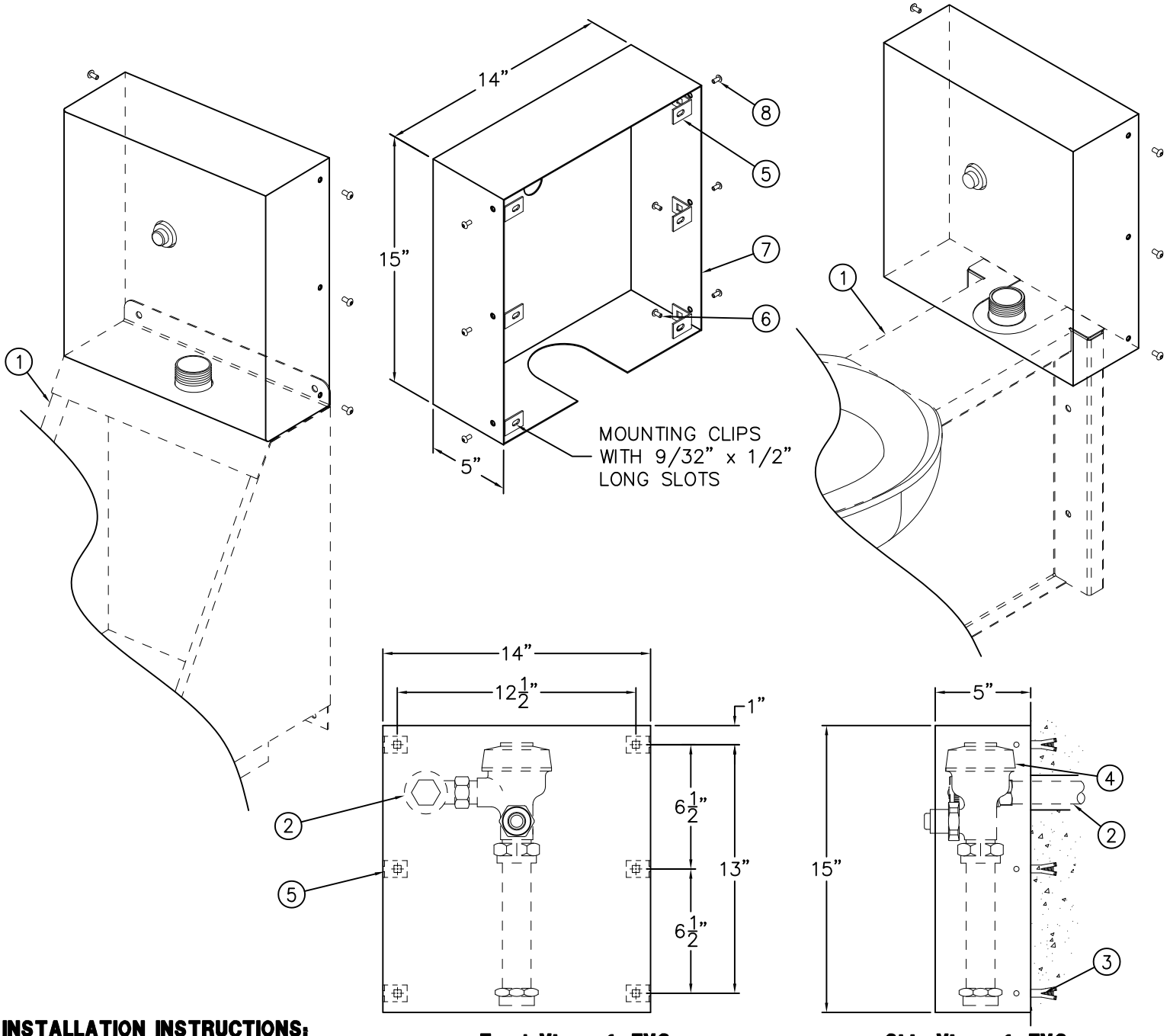

Front View of -FVC

Side View of -FVC

INSTALLATION INSTRUCTIONS:

A– MOUNT FIXTURE ① TO WALL.

B– ROUGH–IN FOR FLUSH VALVE SUPPLY ② REFER TO FIXTURE INSTALLATION INSTRUCTIONS.

C– LOCATE AND INSTALL WALL ANCHORS (BY OTHERS) ③.

D– INSTALL FLUSH VALVE ④ TO FIXTURE ①.

E– ATTACH MOUNTING CLIPS ⑤ TO WALL USING MOUNTING SCREWS ⑥ (BY OTHERS).

F– ATTACH FLUSH VALVE COVER ⑦ TO MOUNTING CLIPS ⑤ USING #10–32 SCREWS ⑧ PROVIDED.

Reference Drawings	
Security Screws	9951–005–001
Tinnerman Nuts	9951–007–001

NOTE: FIXTURES SHOWN FOR REFERENCE ONLY.

ACORN ENGINEERING COMPANY
P.O. BOX 3527 Industry, CA 91744
15125 Proctor Ave Industry, CA 91746
(626) 336–4561 FAX (626) 961–2200

TITLE **-FVC FLUSH VALVE COVER #2802**

MANUFACTURE DATE	DATE ISSUED	DRAWING NUMBER
FEBUARY 1975 TO PRESENT	**04/17/98**	**9908-395-001**
	DATE REVISED **04/15/13 C**	

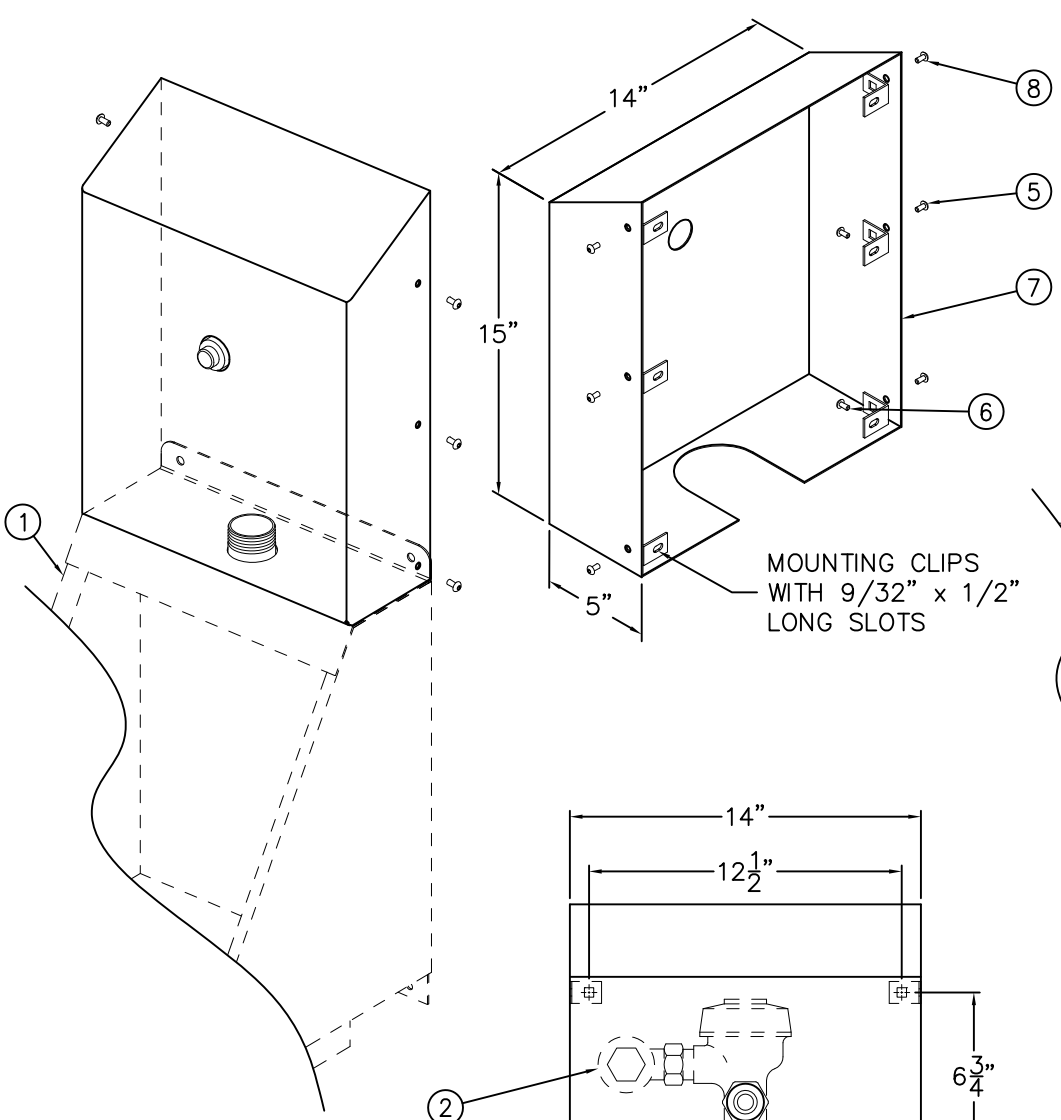

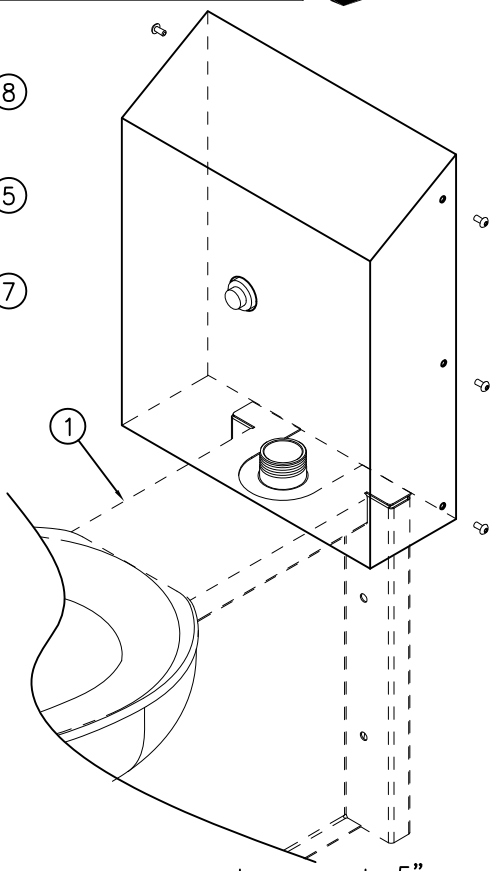

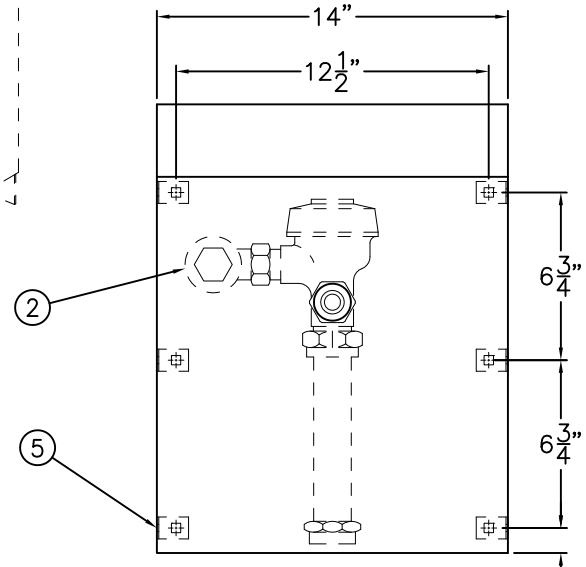

Front View of -FVC-SLPT

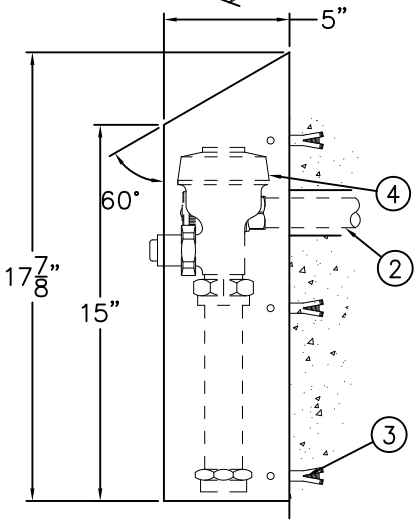

Side View of -FVC-SLPT

INSTALLATION INSTRUCTIONS:

A– MOUNT FIXTURE ① TO WALL.

B– ROUGH–IN FOR FLUSH VALVE SUPPLY ② REFER TO FIXTURE INSTALLATION INSTRUCTIONS.

C– LOCATE AND INSTALL WALL ANCHORS (BY OTHERS) ③.

D– INSTALL FLUSH VALVE ④ TO FIXTURE ①.

E– ATTACH MOUNTING CLIPS ⑤ TO WALL USING MOUNTING SCREWS ⑥ (BY OTHERS).

F– ATTACH FLUSH VALVE COVER ⑦ TO MOUNTING CLIPS ⑤ USING #10–32 SCREWS ⑧ PROVIDED.

Reference Drawings	
Security Screws	9951–005–001
Tinnerman Nuts	9951–007–001

NOTE: FIXTURES SHOWN FOR REFERENCE ONLY.

ACORN ENGINEERING COMPANY
P.O. BOX 3527 Industry, CA 91744
15125 Proctor Ave Industry, CA 91746
(626) 336–4561 FAX (626) 961–2200

TITLE **-FVC-SLPT FLUSH VALVE COVER WITH SLOPING TOP #2802**

MANUFACTURE DATE	DATE ISSUED	DRAWING NUMBER
FEBUARY 1975 TO PRESENT	**03/07/11**	**9908-397-001**
	DATE REVISED **04/15/13 E**	