Since 1966
CHRONOMITE®
Electric Tankless Water Heaters

ELECTRIC TANKLESS WATER HEATER - POINT OF USE

Chronomite Laboratories is a Member of Morris Group International™

INSTANT-FLOW® SR WATER HEATER

INSTALLATION AND OPERATION INSTRUCTIONS (LOW ACTIVATION MODELS)

TABLE OF CONTENTS

Technical Information 2
Dimensional Data 3
Installation 4-5
Specifications 6
Troubleshooting 7
Warranty Information 8

REQUIRED ITEMS FOR INSTALLATION NOT SUPPLIED

- Electrical Junction Supply Box
- Electrical Supply Conduit
- Electrical Supply Wire
- Dual Outlet Angle Stop
- 3/8” Flex Hose or 3/8” O.D. Tubing (2)
- Carpenters Level
- Flat Head Screwdriver
- Phillips Head Screwdriver

*Acorn Engineering Company™ assumes no responsibility for use of void or superseded data. © Copyright Acorn Engineering, City of Industry, CA Member of Morris Group International. Please visit **www.chronomite.com** for most current specifications.*

3100-005-001
II-929 07/17 REV 10

COMPLIES WITH STANDARDS

CALGreen

Federal Public Law 111-380 (No Lead)

Intertek 5001365

CHRONOMITE
Instantaneous Water Heaters
17451 Hurley St.
City of Industry, CA
91744 U.S.A.
Phone 800-447-4962
626-937-4270
www.chronomite.com

Member of MORRIS GROUP INTERNATIONAL

INSTANT-FLOW® SR SPECIFICATIONS
(LOW ACTIVATION MODELS)

IMPORTANT

Before installation of heater, review electrical requirements needed for model of heater selected.

INCOMING WATER TEMPURATURE INCREASE					
MODEL	VOLTAGE	ACTIVATION	0.40 GPM [1.5 LPM]	0.50 GPM [1.9 LPM]	0.75 GPM [2.8 LPM]
SR-15L	110/120	0.35 GPM [1.3 LPM]	31°F [17°C]	-	-
SR-15L	277	0.35 GPM [1.3 LPM]	71°F [39°C]	38°F [21°C]	28°F [16°C]
SR-20L	110/120	0.35 GPM [1.3 LPM]	41°F [23°C]	22°F [12°C]	-
SR-20L	208	0.35 GPM [1.3 LPM]	71°F [39°C]	38°F [21°C]	28°F [16°C]
SR-20L	220/240	0.35 GPM [1.3 LPM]	82°F [46°C]	44°F [24°C]	33°F [18°C]
SR-20L	277	0.35 GPM [1.3 LPM]	95°F [53°C]	50°F [28°C]	38°F [21°C]
SR-30L	110/120	0.35 GPM [1.3 LPM]	61°F [34°C]	33°F [18°C]	25°F [14°C]

OUTLET TEMPERATURE = INLET TEMPERATURE + TEMPERATURE INCREASE

TABLE 1											
MODEL	WATTAGE	VOLTAGE	AMPS	BREAKER SIZE		MODEL	WATTAGE	VOLTAGE	AMPS	BREAKER SIZE	
				INTERMITTENT DUTY	CONTINUOUS DUTY					INTERMITTENT DUTY	CONTINUOUS DUTY
SR-15L	1800	110/120	15	15	20	SR-20L	4800	220/240	20	20	30
SR-15L	4150	277	20	15	20	SR-20L	5540	277	20	20	30
SR-20L	2400	110/120	20	20	30	SR-30L	3600	110/120	20	30	40
SR-20L	4160	208	20	20	30						

NOTE: BEFORE INSTALLATION, COMPARE ELECTRICAL NEEDED FOR THE MODEL OF HEATER SELECTED.

INSTANT-FLOW® SR SPECIFICATIONS:

DIMENSIONS:	6-1/4" [159 mm] X 9-5/8" [244 mm] X 2-3/4" [70 mm]
WEIGHT:	5 LBS. [2.27 Kg]
MATERIALS:	ALUMINUM HOUSING, CELCON WATERWAYS, NICHROME PARTS
COLOR:	WHITE
PIPE FITTINGS:	3/8" COMPRESSION
OPERATING PRESSURE RATING:	25 PSI [172 kPa] MINIMUM, 80 PSI [551.6 kPa] MAXIMUM
MAXIMUM PRESSURE RATING:	150 PSI [1034.2 kPa] NO PRESSURE RELIEF VALVE NEEDED UNLESS REQUIRED BY LOCAL CODES.
MAXIMUM OPERATING TEMP:	160°F [71°C]
MAXIMUM INLET WATER TEMP:	80°F [27°C]
MINIMUM OPERATING FLOW RATE:	0.35 GPM [1.3 LPM]
LISTINGS:	UL, HUD, IAPMO, UPC, ETL

HOW INSTANT-FLOW® SR WORKS

The engineered plastic case houses a series of ingeniously designed coils that instantly heat water as it flows through the vessel. A unique power switch automatically applies electrical current to the coils when hot water is requested. The electrical current is not applied when the water is not in use.

INSTANT-FLOW® SR DIMENSIONAL DATA

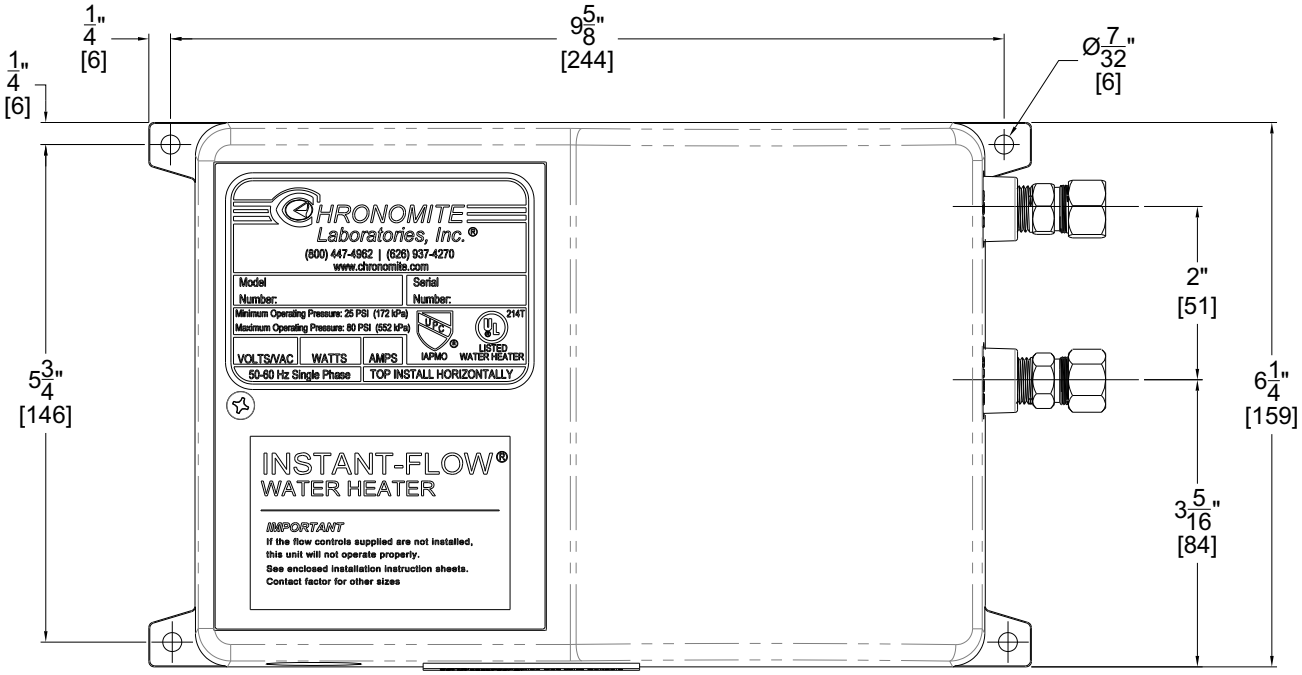

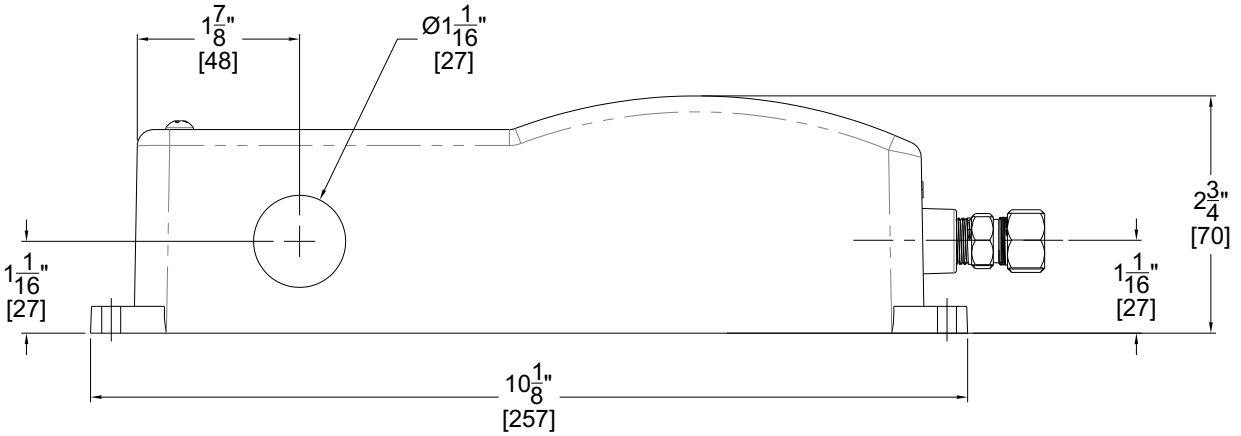

INSTANT-FLOW® SR INSTALLATION

CAUTION

A) Turn off the circuit breaker to avoid dangerous electrical shocks.
B) Turn off the water supply.
C) Do not apply heat to inlet or outlet fittings on heater. Do not solder direct.
D) Flush supply line of all foreign material such as pipe dope, pipe chips, solder, sand, etc. before making up supply connections after working on water piping.

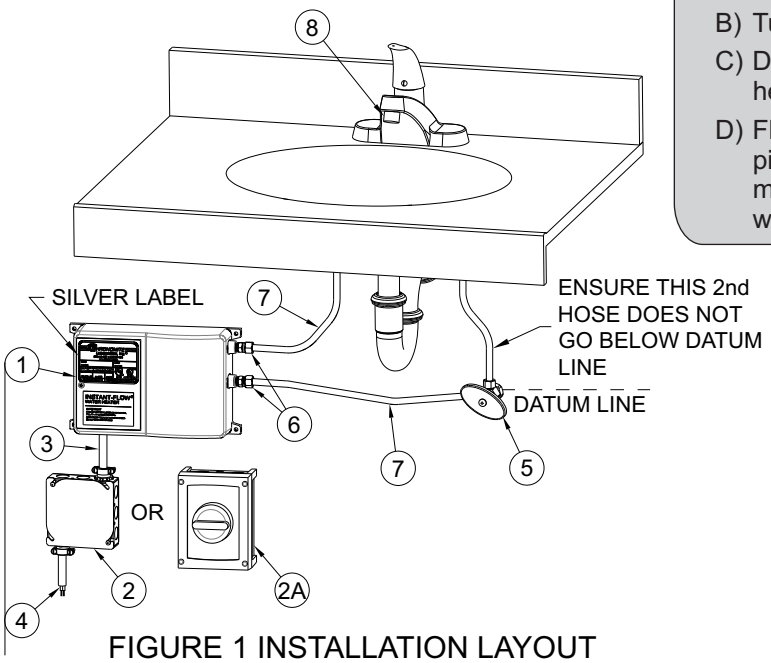

FIGURE 1 INSTALLATION LAYOUT

1. Chronomite Instant-Flow SR See page 2 for selection
2. Electrical junction supply box (optional)
2A. 2095-1 Disconnect Switch (optional)
3. Electrical supply conduit
4. Electrical supply wire
5. Dual outlet stop 3/8” Comp outlet connections
6. Fittings (supplied) 3/8” Comp x 1/4” NPT
7. Faucet Supply inlet hoses 3/8” NPS
8. Flow control (supplied) Dual threads 15/16” male and 55/64” Female

HEATER INSTALLATION:

1. Remove cover off of water heater. Attach conduit to the conduit connection punching. Then feed wires. Do not attach wiring.
2. Mount unit horizontally against the wall so the silver label reads correctly (See Figure 1). Use level to ensure unit is level and mount with four screws through the flanges located on each corner using molly anchors or fasteners.
3. Connect plumbing. Use female 1/4” NPT or hose with 3/8” compression at cold water inlet and hot water outlet to 3/8” compression faucet inlet connections (See Figure 1). **DO NOT APPLY HEAT TO THESE FITTINGS.**
4. Run water through the unit to expel all air bubbles. Cycle hot side of faucet 10 times to assist in removing air bubbles. Check for leaks at all fitting joints. If no leaks proceed to electrical installation.

CAUTION: HEATING ELEMENTS MAY BURN OUT IF UNIT IS NOT MOUNTED HORIZONTALLY

ELECTRICAL INSTALLATION:

1. Connect power supply wires appropriately sized and protected by circuit breaker to the input terminals on the heater (hard wired) as shown in the Figure 2 wiring diagram.
2. Refer to Table 1 above on Page 2 for the voltage and amperage of the supply power.
3. Ensure each wire L2/N, G, L1 are connected to the respective terminals. Only connect to rated voltage on nameplate.
4. Ensure water inlet valve to heater is fully open. Do not throttle inlet
5. Turn on circuit breaker. Turn on water flow to exceed activation point listed in chart 2. The unit is almost ready for use. Shut off circuit breaker.
6. Check for leaks at all fitting joints and also inside heater.
7. Install cover. Turn on circuit breaker. Unit is now ready for use.
8. Local plumbing and electrical codes must be followed in this installation of water heater and the accessories.

NOTES:

1. Failure to comply with code requirements voids the warranty.
2. Failure to install faucet flow control as shown on (Figure 3 page 6) may cause unsatisfactory operation of the heater.
3. Do not use SR series as a booster heater. Use CM or M series.

INSTANT-FLOW® SR INSTALLATION (cont.)

IMPORTANT

The manufacturer of this water heater will not be liable for any damages due to the failure to follow these installation and operation instructions.

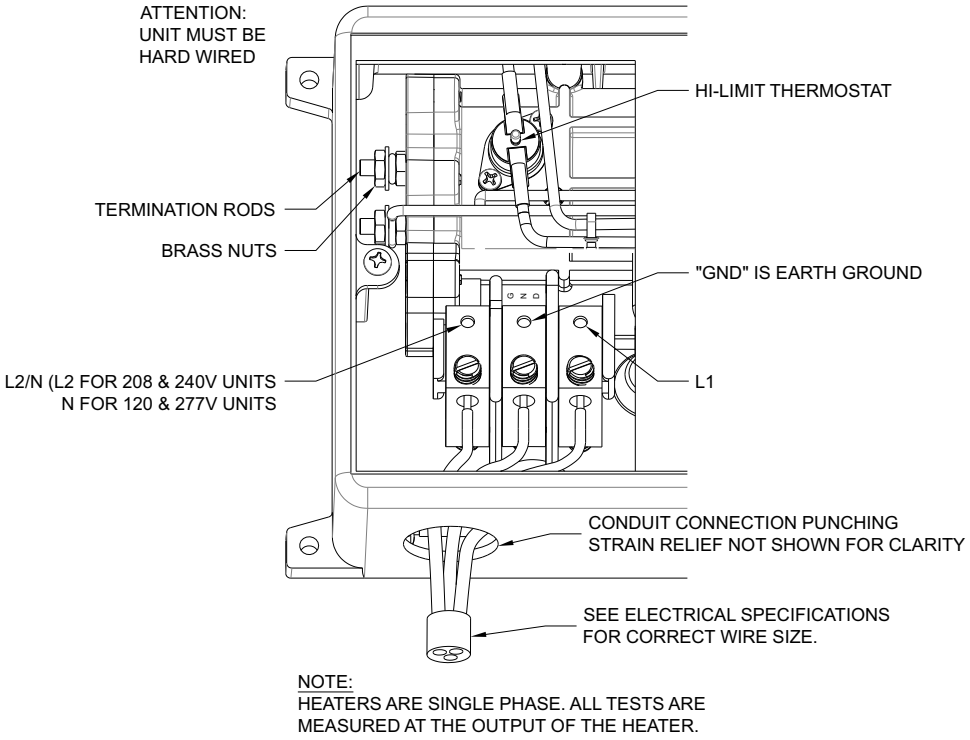

NOTE:
HEATERS ARE SINGLE PHASE. ALL TESTS ARE MEASURED AT THE OUTPUT OF THE HEATER.

FIGURE 2 WIRING CONNECTION

NOTICE

Air in the heater may cause the elements to burn out. If the water lines are drained, allowing air into the heater, be sure to follow the following start-up procedure:

START UP PROCEDURE:

1. Turn off electrical supply - open circuit breaker
2. Turn on water supply. Cycle hot side of faucet 10 times to assist in removing air bubbles.
3. Expel all air from lines and heater. Check for leaks at all fittings, joints and at water heater.
4. Turn on electrical power supply - close circuit breaker.

INSTANT-FLOW® SR SPECIFICATIONS
(LOW ACTIVATION MODELS)

OPERATION INSTRUCTIONS:

- Turn the hot water fixture to activate the flow switch. The flow switch activates at 0.35 gallons per minute (GPM) [1.3 LPM] and deactivates at 0.30 gallons per minute (GPM) [1.1 LPM].
- If you increase the flow rate of the water above the KW capacity, the water temperature will become cooler. Cold water can always be mixed just as with a conventional system if using a two handle faucet. Select the appropriate flow control.
- Once you decrease the hot water flow rate to 0.30 GPM [1.3 LPM] the unit will deactivate. It is not advisable to operate the heater at 0.30 GPM [1.3 LPM] hot water flow rate.

NOTES:

1. Periodically inspect (4 times a year) the supply lines, connections and heater for any moisture, corrosion or other potential preventable problems.
2. Prior to shutting off water valves for servicing, winterization, etc, always disconnect power from unit 1st.
3. Unit is intended to heat water only, and does not provide a means of cooling. Cold water feed to inlet only.

   Outlet Temperature = Inlet Temperature + Temperature increase (See Chart on Page 2)

OPTIONS:

- PA 765 ABS Housing (P)
- Satin Finish Stainless Steel Housing (SS)
- High Polish Finish Stainless Steel (SSP)
- Pressure & Temp. Relief Valve Assembly (TP)
- 1/2" Male NPT (NPT08)
- Disconnect Switch, Rotary 40A - Lockable Nema 4X (2095-1)

FLOW CONTROLS:

You may want to install the supplied flow control in your design. This high-quality control makes the water heating system operate more effectively, as well as save water. the supplied GPM [LPM] flow control assures that the flow rate will not exceed GPM [LPM], however, less water can always be used. Consumer can mix the cold water as with a conventional system. See Flow Control Models Chart below.

FLOW CONTROL SPECIFICATIONS

MATERIAL: Chrome plated, brass housing.
THREADING: DUAL threads 15/16" male
55/64" female

NOTE: Flow controls are adaptable to other thread configurations. Vandal resistant models are available. Please call factory If adapter or vandal resistant model is needed.

FLOW CONTROL MODELS CHART			
KW	ACCESSORY PACKAGE	≥ 45 psi	< 45 psi
1.8 - 3.6	AP-1-P	L412-0.5-NP 0.5 GPM SPRAY	L412-1.0-NP 1.0 GPM SPRAY
4.0 - 5.0	AP-2-P	A412-1.0-NP 1.0 GPM LAMINAR	A412-1.5-NP 1.5 GPM LAMINAR

NOTICE

•Flow controls are adaptable to other thread configurations. Please call factory if adapter is needed.

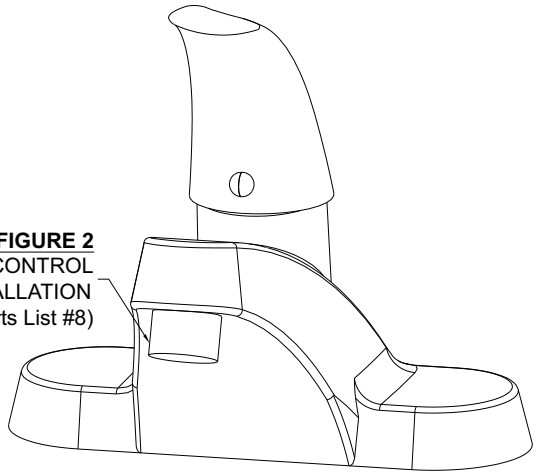

FIGURE 2
FLOW CONTROL INSTALLATION
(See Parts List #8)

IMPORTANT

Periodically inspect (4 times a year) the supply lines, connections and heater for any moisture, corrosion or other potential preventable problems.

INSTANT-FLOW® SR TROUBLESHOOTING GUIDE

TROUBLESHOOTING GUIDE

Your Instant-Flow SR water heater has no internal user serviceable parts and should be returned to the factory for repair or replacement. Please contact factory for return authorization. If after following the Installation Instructions, your Instant-Flow SR does not heat water in accordance with this literature, please check the following:

1. **Low Power** – Verify your voltage by using a voltage meter. You should obtain your reading off the two outside terminals located on the heater. Compare the reading against the voltage specified in the Installation Instructions. The center terminal is always the earth ground. The hot and neutral legs, in the case of 110 V heaters, are attached on the two outside terminals.

2. **Low Voltage** – The percentage of reduction in voltage will result in a like reduction in temperature increase.

3. **Check Low Amperage Draw** – Check amperage draw using an Amperage Probe. Please compare your results with the Installation Instructions (Table 1) to determine if the heater is operating correctly.

4. **Length of Pipe** - Length of pipe run will affect the temperature increase. The heater should be mounted no more than 12-18 inches [305mm-457mm] from the point of use.

5. **Check shut off valve.** Check shut-off valve and make sure valve is open 100% to allow full water pressure and flow to the heater.

6. **High-Limit Thermostat -** Shut off power on breaker. Remove cover. Push in reset button on module. Refer to Figure 2 for location. Reinstall cover. Turn on breaker. If problem persists, contact factory.

7. **Heater Element -** Shut off power on circuit breaker. Remove cover. Measure element resistance by using an ohmmeter or multi-meter. Obtain your reading off of termination rods with brass nuts on each heater module. Refer to Figure x for location. This reading should be between 6 and 30 ohms for each element.

8. **Check Flow Rate** – Controlling flow rate is essential to insure proper temperature increase. In the case of the low flow rate heater it is mandatory that the flow control be attached to the end of the faucet. Check your flow rate to insure proper operation of the heater. Low Flow Rate Models require 0.35 GPM (1.3 LPM) to activate.

9. **Installation** – Heater must be installed in a horizontal position. The silver label will then be located in the upper left corner as you face the heater.

10. **Water Supply** – Do not throttle water supply to inlet of Instant-Flow SR. Operating conditions shall not exceed specification on page 2.

11. **Freezing** – Instant-Flow SR heaters must be drained and stored if installed in a location subject to freezing. Disconnect the inlet/outlet compression fittings and blow air through one side of the heater to assist draining. Failure to completely remove water from the unit will result in freezing and cracking.

12. **Problems?**- Call our toll-free hotline 800-447-4962 or 626-937-4270

WARNING

- This water heater is not intended for use by persons (including children) with reduced physical, sensory or mental capabilities, or lack of experience and knowledge, unless they have been given supervision or instruction concerning use of the water heater by a person responsible for their safety.
- Children should be supervised to ensure that they do not play with the water heater.
- The water resistivity must not be less than 1100 OHM-CM.
- The water heater must be earth grounded.
- The water heater is not to be installed in locations where freezing can occur.

CHRONOMITE®
Instantaneous Water Heaters

MAIL ADDRESS
P.O. BOX 3527
CITY OF INDUSTRY, CA 91744 U.S.A.

PHYSICAL ADDRESS
17451 HURLEY STREET
CITY OF INDUSTRY, CA 91744 U.S.A.

TOLL FREE 800-447-4962 • **LOCAL** 626-937-4270
FAX 626-937-4279 • **WEB** www.chronomite.com

WARRANTY INFORMATION

Your Instant-Flow SR water heater has been engineered and built to the highest quality standards and is backed by a full, factory warranty. Every Instant-Flow SR water heater is guaranteed to be free from defects in material and workmanship for a period of (1) year from the date of purchase. The above warranty applies to original purchaser if unit is installed per Chronomite Laboratories, Inc.'s Installation Instructions. Chronomite Laboratories, Inc. will repair or exchange parts at the factory at no cost. This warranty is limited to repairing or replacing said products which prove to be defective upon factory inspection, F.O.B. City of Industry, California.

EXCLUSION OF COVERAGE FROM THIS LIMITED WARRANTY:

1. Chronomite is not liable under this limited warranty or otherwise if the water heater has not been installed or maintained in accordance with Chronomite's printed instructions or installed with improper installation materials. In addition, the water heater or any of its component parts have been subject to misuse, neglect, alteration or accident and the water heater has not been installed in accordance with the applicable local plumbing and or building codes and/or regulations.
2. Chronomite is not liable under this warranty if the water heater has not been continuously supplied with potable water or the water inlet temperature is above Chronomite's recommended maximum temperature. In addition, water heater experiences any water pressure or flow interruptions, normal operation inlet water pressure is outside of the published specification (UPC 2009), or exposed to any condition that causes the heater to turn on before the air is purged from the heater also known as "dry fire."
3. Chronomite is not liable if the water heater has been exposed to conditions resulting from floods, earthquakes, winds, fire, freezing, lightning or circumstances beyond Chronomite's control, or has been used for other than the intended purpose.

If violation occurs from the stated exclusions of coverage from this limited warranty or thereafter; owner, and not Chronomite or its agent/representative, is liable for and shall pay for all field charges, labor, water heater, damage or other expenses incurred in the repair or replacement of the water heater.