murdock® SINCE 1853

WATER COOLER/BOTTLE FILLER

A172.8-UG-VR-D1-BF Series

BARRIER FREE, VANDAL RESISTANT, UNIVERSAL BI-LEVEL, WALL MOUNTED WATER COOLER WITH VANDAL RESISTANT PUSHBUTTON OR SENSOR OPERATED BOTTLE FILLER

STANDARD FEATURES

Electric Water Cooler

- *Child Or Adult Ada Compliant (When Properly Installed)*
- *Universal Bi-Level - Can Be Installed Left Unit High Right Unit Low or Opposite With No Additional Parts Required.*
- *Apron and One-Piece Bottom Wrapper is Satin Finish*
- *304 Stainless Steel Basin And Flush Mounted Chrome Plated Brass Button*
- *Polished Stainless Steel, Vandal Resistant, Anti-Rotation, Non-Squirt Bubblers*
- *Auto-stop Allows Cartridge And Strainer Service Without Removing Cooler Deck To Access Water Supply Stop*
- *Lead-Free*
- *Rough-Ins Match Other Manufacturer's for Easy Replacement*

Bottle Filler

- *Hands-Free Sensor or Pushbutton Operation*
- *ADA Reach Compliant*
- *100-Mesh Inlet Strainer*
- *115V Plug-In Transformer with -BF2S Only*
- *1 GPM Laminar Flow*

SUGGESTED SPECIFICATIONS

Electric Water Cooler

Model A172408S-UG-VR-D1 is a bi-level, self-contained, pressure Water Cooler that delivers a minimum of **8.0 GPH** (30.3 LPH) of water at 50°F (10°C) cooled from 80°F (26.7°C) inlet water and 90°F (32.2°C) ambient. Units shall be activated by Vandal Resistant Chrome Plated Brass Front Pushbuttons by using less than 5 pounds of force. Lead-Free Bubbler shall deliver a 0.5 GPM flow, have an integrally designed non-squirt feature and operate on a water pressure range of 20-105 PSIG. Basin shall be constructed from 304 Stainless Steel and have an Integral Drain. Cabinet shall be Stainless Steel with Satin Finish. Cooling system shall use R-134a Refrigerant and be Capillary Tube regulated. An Adjustable Thermostat with an "off" position shall regulate the refrigeration system. Unit shall be listed by Underwriters Laboratories for both the US and Canada and is compliant to the Air Conditioning and Refrigeration Institute Standard 1010. Unit is certified to ANSI A117.1, Public Law 111-380 (NO-LEAD), CHSC 116875 and NSF/ANSI 61, Section 9. Fixture meets ADA, ADA Standing Person, and ADA Child requirements when mounted appropriately. Unit shall still deliver ambient water temperature to the Bubbler in the absence of electrical power as long as there is a pressurized water supply.

Bottle Filler BF1S

BF1S is a Pushbutton Operated Bottle Filler. Housing construction is heavy gauge Stainless Steel with a satin finish. Bottler Filler shall be activated using a pneumatically operated Hemispherical Pushbutton using less than 5 pounds of force. Bottle Filler shall provide approximately 1 GPM flow rate with a Laminar Flow Spout to minimize splashing.

Bottle Filler BF2S

BF2S is a 9 volt Sensor Operated Bottle Filler. Housing construction is heavy gauge Stainless Steel with a satin finish. Optional -BCD (Bottle Counter Display) indicates the quantity of 16 oz disposable Plastic Bottles saved from a landfill and also displays the Water Filter status. Bottle Filler shall provide approximately 1 GPM flow rate with a Laminar Flow Spout to minimize splashing.

Complies with the following standards: NSF/ANSI 61 GREEN UPC Water Efficiency Pb Federal Public Law 111-380 (No Lead) CE (220V Compressor Only) CHSC 116875 *Test rating conditions are compliant with ARI 1010.* c UL us

Model A172408S-UG-VR-D1-BF2S-BCD Shown
PATENT# 10,100,933

Maintenance Advantage® Water Cooler by Murdock Manufacturing

"FOR INDOOR OR OUTDOOR USE"

Model Number	GPH*	Rated Watts	Full Load Amps	Approx. Shipping Weight
A172408S-UG-VR-D1-BF	8.0	335	4.4	155 lbs.

* GPH of 50°F water at 90°F ambient room temperature and 80°F inlet water temperature Compressor motor operates on 115 Volt / 60 Hz single phase.

MODEL:
(Must Specify)

STAINLESS STEEL BUBBLER

❑ A172408S-UG-VR-D1 Satin Stainless Finish (Standard)

FLEXIBLE BUBBLER

❑ A172408F-UG-VR-D1 Satin Stainless Finish

MUST SPECIFY BOTTLE FILLER:

❑ BF1S Bottle Filler with Pushbutton Operation
❑ BF2S Bottle Filler with Sensor Operation
❑ BF2S-BAT Bottle Filler with Battery Operated Sensor Operation
❑ BF2S-BCD Bottle Filler with Sensor Operation with Bottle Counter Display

WATER COOLER OPTIONS:
(additional costs may apply)

❑ -BP8 Back Panel, Stainless Steel
❑ -CSC6 Concealed Support Carrier
❑ -DD Drop Down Door (with -WF1 Only)
❑ -LOGO Customer Specified Logo / Graphics
❑ -SK5 Skirt Kit for upper unit
❑ -WF1 1500-Gallon Capacity, NSF 42+53, 1-Micron Lead Reduction Filter
❑ -WF3 3000-Gallon Capacity, NSF 42+53, 1-Micron Lead Reduction Filter
❑ -220V 220 volt / 50 Hz or 60 Hz Compressor

Member of U.S. Green Building Council *Recyclable Product* *Water Conserving Product*

⚠ WARNING: Cancer and Reproductive Harm - www.P65Warnings.ca.gov

MURDOCK MFG. • 15125 Proctor Avenue • City of Industry, CA 91746 USA
Phone 800-453-7465 or 626-333-2543 • Fax 626-855-4860 • www.murdockmfg.com

Member of MORRIS GROUP INTERNATIONAL

murdock® SINCE 1853 WATER COOLER/BOTTLE FILLER

A172.8-UG-VR-D1-BF Series

BARRIER FREE, VANDAL RESISTANT, UNIVERSAL BI-LEVEL, WALL MOUNTED WATER COOLER WITH VANDAL RESISTANT PUSHBUTTON OR SENSOR OPERATED BOTTLE FILLER

A172400S-UG-VR-D1-BF2S-BCD SHOWN

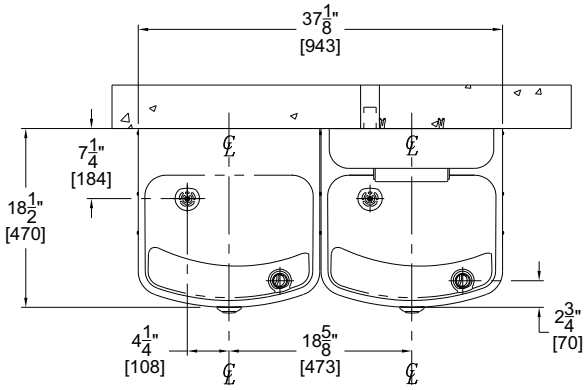

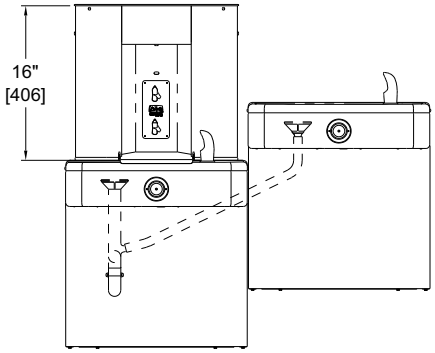

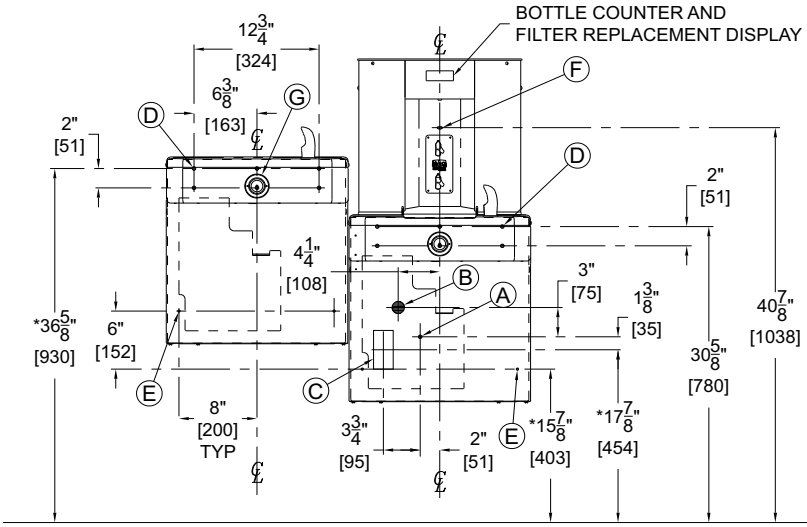

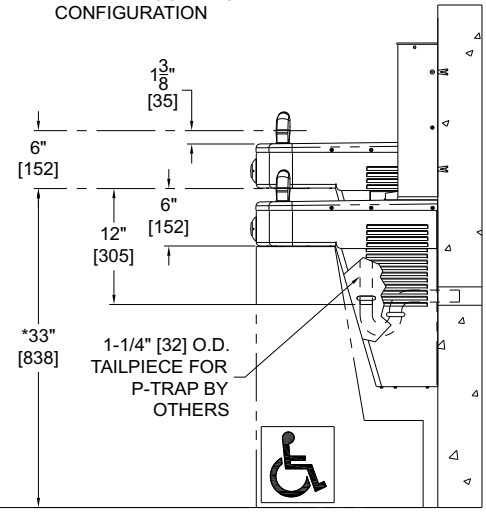

GENERAL NOTES:

1. ALL DIMENSIONS ARE IN INCHES [MM]
2. ALLOW 4 INCHES [102MM] MINIMUM CLEARANCE PER SIDE FOR VENTILATION
3. *DIMENSIONS SHOWN ARE FOR ADA ADULT HEIGHT. ADJUST VERTICAL DIMENSIONS AS NECESSARY TO COMPLY WITH FEDERAL, STATE & LOCAL CODES
4. STOP VALVE, P-TRAP & ELECTRICAL OUTLET NOT SUPPLIED
5. IMPORTANT: COOLERS MUST BE ATTACHED TO WALL WITH APPROPRIATE ANCHOR SCREWS

A. 3/8" O.D. SUPPLY INLET
B. WASTE OUTLET FOR P-TRAP BY OTHERS FOR PROVIDED 1-1/4" O.D. TAILPIECE
C. ELECTRICAL SERVICE ROUGH
D. Ø3/8" HANGER BRACKET PUNCHING, 6 PLACES ON EACH FIXTURE FOR ANCHORING HARDWARE BY OTHERS
E. Ø1/4" PUNCHING, 2 PLACES ON EACH FIXTURE FOR ANCHORING HARDWARE, BY OTHERS
F. BOTTLE FILLER SENSOR
G. VANDAL RESISTANT PUSHBUTTON CARTRIDGE

Murdock Mfg.™ warrants that its products are free from defects in material or workmanship under normal use and service for a period of one year from date of shipment. Murdock's liability under this warranty shall be discharged solely by replacement or repair of defective material, provided Murdock™ is notified in writing within one year from date of shipment, F.O.B. Industry, California.

SELECTION SUMMARY & APPROVAL FOR MANUFACTURING

Model Number & Options_____ Quantity_____

Company_____

Contact_____ Title_____

Signature (Approval for Manufacturing)_____ Date _____

All dimensions are subject to manufactures tolerance of plus or minus ½" nominal and subject to change without notice. Murdock assumes no responsibility for use of void or superseded data. Dimensions may change with the addition of optional accessories. Murdock Mfg.™, Member of Morris Group International™. Please visit ***www.murdockmfg.com*** *for most current specifications.*

MURDOCK MFG. • 15125 Proctor Avenue • City of Industry, CA 91746 USA
Phone 800-453-7465 or 626-333-2543 • Fax 626-855-4860 • www.murdockmfg.com

Member of MORRIS GROUP INTERNATIONAL